Product leaflet

NOM 4

Olietågefilter for enkle CNC-maskiner



This content is protected under copyright law, furnished for informational use only, and subject to change without notice. © Nederman Holding AB

NOM 4

- Lave vedligeholdelsesomkostninger
- Selvdrænende olietågefilter
- Enkel installation
- Overlegen udskilningsgrad
- Udformet for at passe til begrænset plads

NOM 4 er et olietågefilter i kompakt udførsel og derfor egnet til enkeltstående lukkede CNC-maskiner. Enheden er enkel at installere og giver maksimal fleksibilitet i værkstedet, eftersom den normalt installeres oven på maskinen. NOM 4 er egnet til filtrering af emulsioner såvel som rene smøremidler etc. og overholder PM10.

This content is protected under copyright law, furnished for informational use only, and subject to change without notice. © Nederman Holding AB

NOM 4

Cerifikat	CE
Lydniveau (dB(A))	66,1
Beskyttelsesklasse	IP 55
Filter udskilningsgrad (%)	97,5
Trykluftsbehov	Nej
Trykluftsforbrug	Nej
Installation	Indendørs
Materiale	Hus i pulverlakeret metalplade.
Egnet til explosivt støv	False
Genvinding (%)	69
Filterareal (m²)	3
Kapacitet (max luftvolumen m3/h)	400
Driftstemperatur	5 - 60 °C
Frekvens (Hz)	50
Type af filter	Filterpatron
Antal filter	1
Filtermateriale	Glasfiber/polyester
Vægt (kg)	29
Effekt (kW)	0,37

This content is protected under copyright law, furnished for informational use only, and subject to change without notice. © Nederman Holding AB

Modeller

	Art. Nr.	Spænding (V)	Faser	Strøm (A)
	12610368	230	1	3,15
	12610468[1]	230	1	3,15
	12610568	400/230	3	1,0/1,75
	12610668[1]	400/230	3	1,0/1,75

[1] Inkluderer HEPA filter med 8,5 m2 fitlerareal samt 99,97% effektivitet.

This content is protected under copyright law, furnished for informational use only, and subject to change without notice. © Nederman Holding AB

Tilbehør

	Tilbehør	Art. Nr.
	Forfilter NOM 4 3m2	12373653
	HEPA 5,5m2 NOM 4	12373645
	Vægbeslag	10504035
	FMS 1-1.6 ventilator starter manuel	14502137
	FMS 2.5-4 ventilator starter manuel	14502337
	Drypopsamler NOM 4	12373657
	Maskinstativ NOM 4	12373705
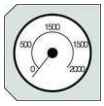	Manometersæt NOM 4	12373656

This content is protected under copyright law, furnished for informational use only, and subject to change without notice. © Nederman Holding AB

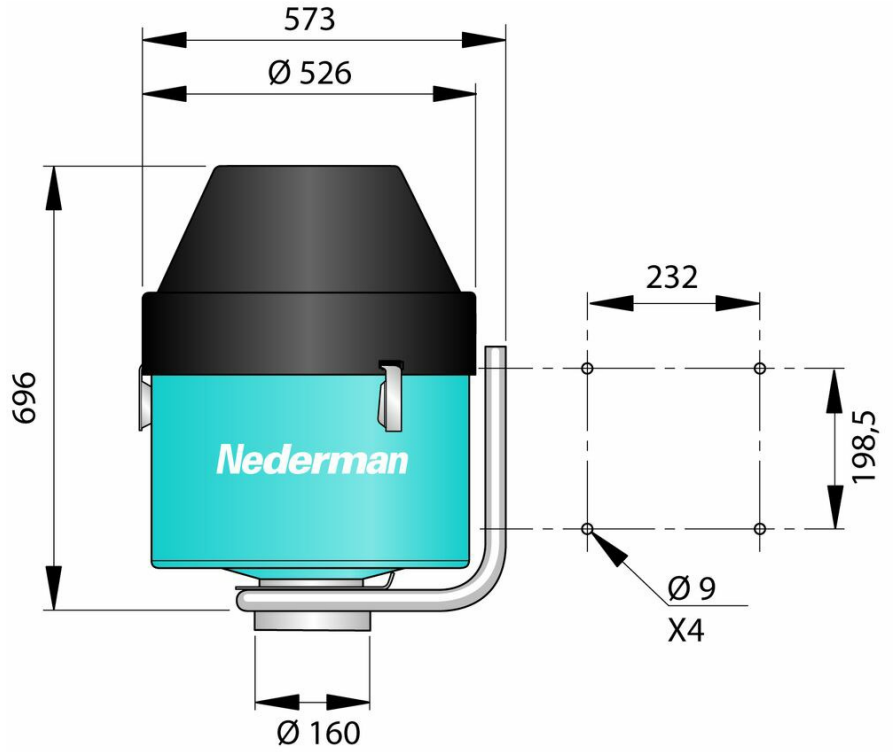

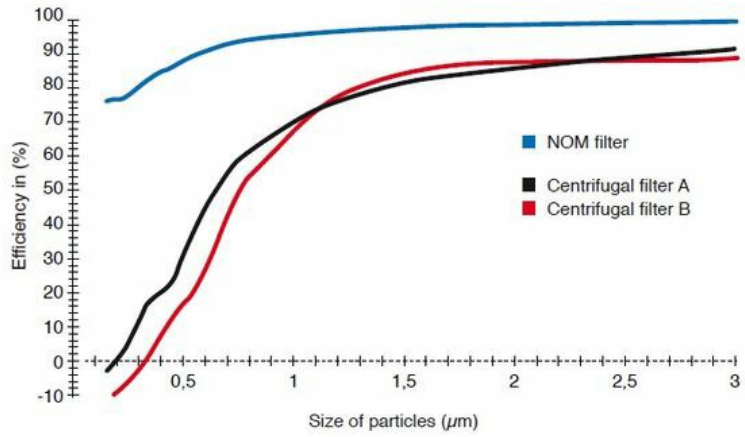

Efficiency of the mainfilter for NOM, compared with typical centrifugal filters, tested with DOP

This content is protected under copyright law, furnished for informational use only, and subject to change without notice. © Nederman Holding AB

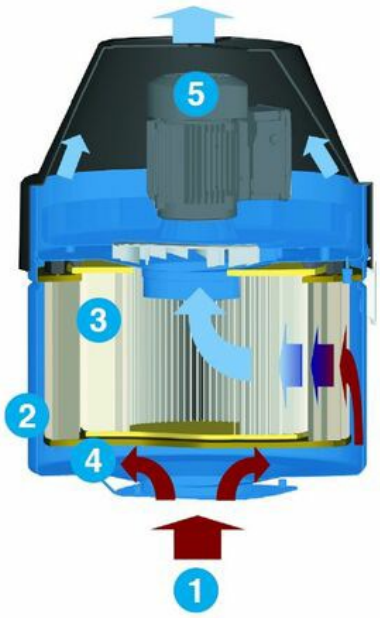

1. *The contaminated air from the process is drawn into the lower chamber.*
2. *The pre-filter separates most of the largest particles and has a self-draining function, and therefore becomes saturated with oil which means that the filter can handle large amounts of emulsion. The pre-filter is washable. Filtration efficiency >97,5% for oilmist.*
3. *The HEPA filter meets the demands from authorities on efficient cleaning. All NOM filters can therefore be equipped with HEPA filter. The HEPA filter is not washable.*
4. *Return drainage pipe. The oil is drained back to a collecting tank or to the machine.*
5. *Integrated fan*

This content is protected under copyright law, furnished for informational use only, and subject to change without notice. © Nederman Holding AB