Product leaflet

NOM 4

Ölnebelfilter für einzelne CNC Maschinen.



This content is protected under copyright law, furnished for informational use only, and subject to change without notice. © Nederman Holding AB

NOM 4

- Geringe Wartungskosten
- Selbstreinigendes Filtersystem
- Leicht zu installieren
- Hohe Filtereffizienz
- Kompaktes, platzsparendes Design

Der NOM4 ist ein kompaktes Ölnebelfilter mit hervoragender Eignung für geschlossene CNC-Maschinen. Diese Einheit ist einfach zu montieren und benötigt keinen zusätzlichen Platz, da es üblicherweise direkt oben auf der Maschine angebracht werden kann. Geeignet für Ölnebel von Emulsionen.

This content is protected under copyright law, furnished for informational use only, and subject to change without notice. © Nederman Holding AB

NOM 4

Zertifikat	CE
Lautstärke (dB(A))	66,1
Schutzklasse	IP 55
Abscheidegrad des Filters (%)	97,5
Truckluftgebrauch	Nein
Druckluftverbrauch	Nein
Installation	im Gebäude
Material	Gehäuse aus ölbeständigem und beschichtetem Blech
Geeignet für explosionsfähigen Staub	False
Recyclingfähigkeit (%)	69 (Gewichts-%)
Filterfläche (m²)	3
Kapazität (Max Volumenstrom m3/h)	400
Betriebstemperatur	5-60°C
Frequenz (Hz)	50
Filtertyp	Patronenfilter
Anzahl der Filter	1
Filtermaterial	Glasfaser / Polyester
Gewicht (kg)	29
Leistung (kW)	0,37

This content is protected under copyright law, furnished for informational use only, and subject to change without notice. © Nederman Holding AB

Modelle

	Item number	Spannung (V)	Anzahl der Phasen	Stromstärke (A)
	12610368	230	1	3,15
	12610468[1]	230	1	3,15
	12610568	400/230	3	1,0/1,75
	12610668[1]	400/230	3	1,0/1,75

[1] Inkl. HEPA-Filter mit 5,5-m²-Filterfläche mit 99,97 % Effizienz.

This content is protected under copyright law, furnished for informational use only, and subject to change without notice. © Nederman Holding AB

Accessories

	Accessory	Item number
	Vorfilter NOM 4 3 m²	12373653
	HEPA 5,5 m² NOM 4	12373645
	Standard-Wandkonsole 90°	10504035
	Ventilatorstarter FMS 1,0-1,6	14502137
	Ventilatorstarter FMS 2,5-4,0	14502337
	Ölsammler T-Stück NOM 4	12373657
	Standgestell Nom 4	12373705
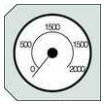	Differenzdruckanzeige NOM 4	12373656

This content is protected under copyright law, furnished for informational use only, and subject to change without notice. © Nederman Holding AB

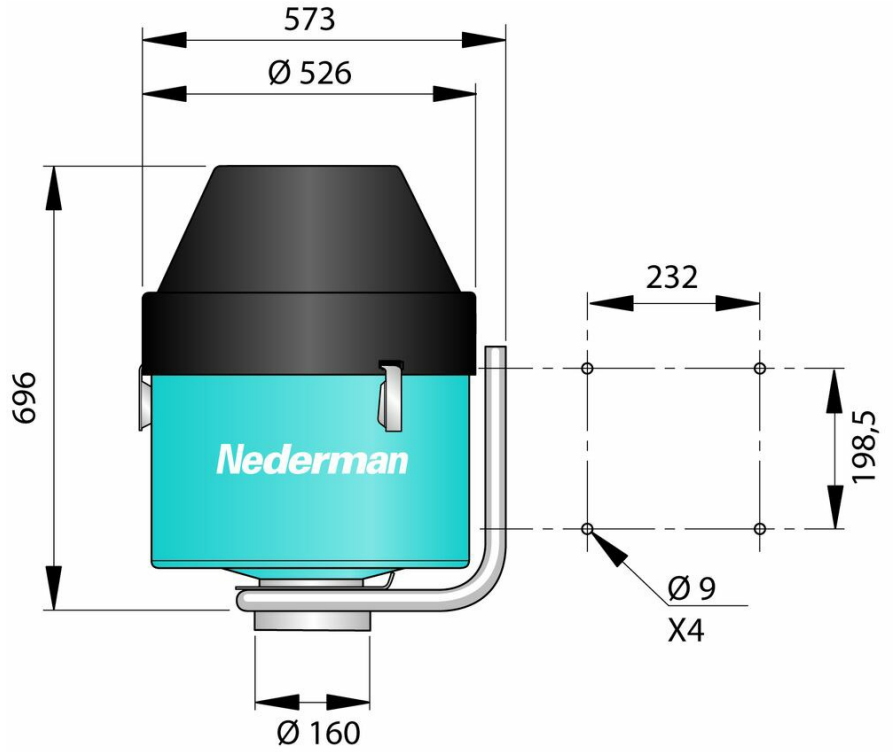

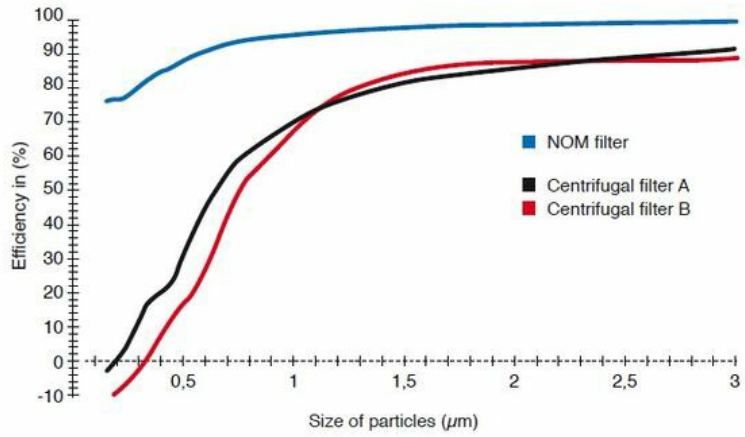

Efficiency of the mainfilter for NOM, compared with typical centrifugal filters, tested with DOP

This content is protected under copyright law, furnished for informational use only, and subject to change without notice. © Nederman Holding AB

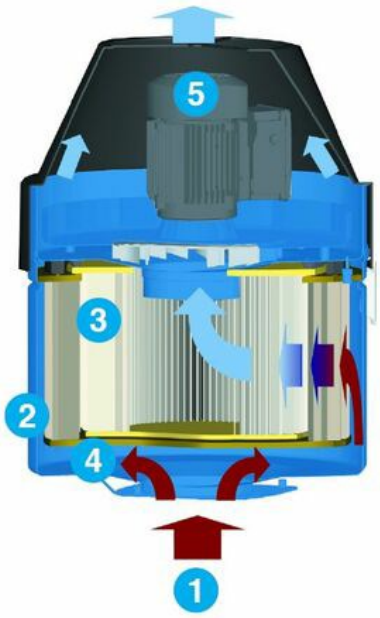

1. *The contaminated air from the process is drawn into the lower chamber.*
2. *The pre-filter separates most of the largest particles and has a self-draining function, and therefore becomes saturated with oil which means that the filter can handle large amounts of emulsion. The pre-filter is washable. Filtration efficiency >97,5% for oilmist.*
3. *The HEPA filter meets the demands from authorities on efficient cleaning. All NOM filters can therefore be equipped with HEPA filter. The HEPA filter is not washable.*
4. *Return drainage pipe. The oil is drained back to a collecting tank or to the machine.*
5. *Integrated fan*

This content is protected under copyright law, furnished for informational use only, and subject to change without notice. © Nederman Holding AB