Product leaflet

Hose Reel H30

Safe and functional retractable hose reel suitable for pneumatical tools, staplers, blow guns and water guns.



This content is protected under copyright law, furnished for informational use only, and subject to change without notice. © Nederman Holding AB

Hose Reel H30

- Easy to install, snap-on wall brackets
- Unique safety latch
- Drum with ball bearings on both sides
- Pressed fitting and steel spiral hose protector
- Hose easily replaced

Safe and functional hose reels for industrial use, professional tradesmen or do-it-yourself workshops. Robust design in high impact composite materials. Supplied with an easily mounted snap-on, pivoting wall bracket and a unique safety latch for safe and easy service. The retractable hose reel is suitable for pneumatic tools, staplers, blow guns and water guns.
The hose reel H30 is retractable and has an optimized spring force, ensuring that the hose retracts smoothly and evenly onto the drum. The high quality spring is pre-tensioned at the factory to suit a wide range of applications, and is well protected inside the drum cavity. The self retracting hose reel H30 is very easy to mount, either on walls, ceilings or floors.

This content is protected under copyright law, furnished for informational use only, and subject to change without notice. © Nederman Holding AB

Hose Reel H30

Certifications	CE
Installation	Indoor
Material	PVC/PUR
Connection hose length (m)	1,5
Media	Compressed air, Water
Delivered with hose	Yes
Diameter, connection hose (mm)	10
Max working pressure (Mpa)	1,5
Corrosion resistance	Standard
Electric/Spring driven	Spring

This content is protected under copyright law, furnished for informational use only, and subject to change without notice. © Nederman Holding AB

Models

	Item no	Type of hose	Colour	Distribution hose length (m)	Distribution hose diameter (mm)	Weight (kg)
	30800230	A	Blue	12	8	4
	30810230	A	Grey	12	8	4
	30830230	P	Blue	10	10	
	30830330	P	Grey	10	10	

Hose types

Hose type	Specification	Temperature range, °C	Hose fittings in free hose end, distribution hose	Hose fitting on free hose end, inlet hose	Hose connection on reel, distribution hose	Hose connection on reel, inlet hose
A	Cover in PVC and inner tube in PUR. Syntethic textile braid	-10 - 60	On hose dimensions Ø 6mm and Ø 8mm -Male ¼" BSP, brass. On hose dimension Ø 10mm -Male ⅜" BSP, brass. All with spiral hose protector.			Hose nipple 3/8" + clip
P	Cover in PVC and inner tube in PVC. Intermediate layer with polyester reinforcement	-20 -+ 60	Male Ø 10mm (3/8"), Brass With spiral hose protection	Male Ø 10mm (3/8"), Brass		

This content is protected under copyright law, furnished for informational use only, and subject to change without notice. © Nederman Holding AB

Accessories

	Accessory	Item no
	Hose 3/8 L=2.5m inl.ASP1 LP H30/H20	30377157
	Air gun, standard.	30410110
	Rotation locking for series C30 and H30 (10 pieces)	30374627

This content is protected under copyright law, furnished for informational use only, and subject to change without notice. © Nederman Holding AB

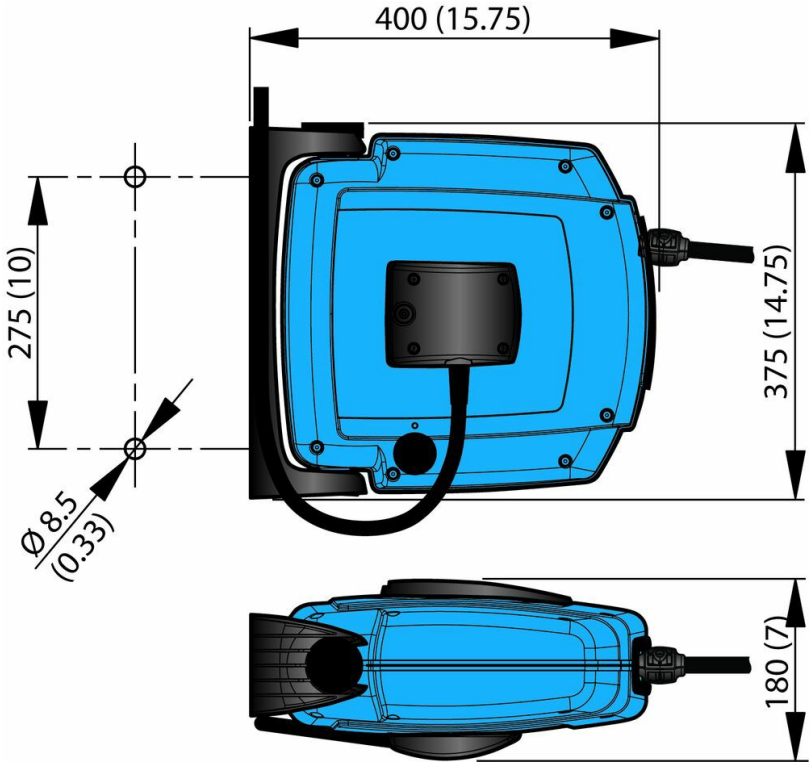

This content is protected under copyright law, furnished for informational use only, and subject to change without notice. © Nederman Holding AB