Product leaflet

Hose Reel 884

Heavy duty hose reel for air,water, oil, diesel and grease.



This content is protected under copyright law, furnished for informational use only, and subject to change without notice. © Nederman Holding AB

Hose Reel 884

- Fully protected inner mechanisms
- Strong, durable and highly corrosion resistant
- Adjustable outlet arm minimizes friction
- Easy service and cleaning.
- The recycled aluminium and composite drum reduces the environmetal impact.

Heavy duty hose reel for air, water, oil, diesel and grease. Suitable for long and heavy hoses. Made of epoxy coated die cast aluminium. Ball bearings in drum and swivel.

This content is protected under copyright law, furnished for informational use only, and subject to change without notice. © Nederman Holding AB

Hose Reel 884

Certifications	CE
Material recycling (%)	100
Connection hose length (m)	1
Colour	Grey
Weight (kg)	31,5
Corrosion resistance	Standard
Electric/Spring driven	Spring

This content is protected under copyright law, furnished for informational use only, and subject to change without notice. © Nederman Holding AB

Models

	Item no	Delivered with hose	Distribution hose diameter (mm)	Max working pressure (Mpa)	Media	Distribution hose length (m)	Diameter, connection hose (mm)	Type of hose
	30860084[1]	No	19	1,5				
	30860184[2]	No						
	30860284	Yes	12,5	1,5	Compressed air, Water	30	12,5	
	30860484[3]	No		5	Diesel			
	30860584	Yes	12,5	7,5	Oil	30	12,5	I
	30860684[4]	No	12,5	7,5	Oil			
	30860784	Yes	25	5	Oil	10	25	B
	30860884[5]	No	25	5	Oil			
	30860984	Yes	6	35	Grease	25	6	J
	30861184[3]	No	19	5	Oil			
	30861084	Yes	19	5	Oil	15	19	I
	30861284	Yes	12,5	7,5	Oil	20	12,5	I
	30861384[4]	No	12,5	10	Oil			

This content is protected under copyright law, furnished for informational use only, and subject to change without notice. © Nederman Holding AB

Models

	Item no	Delivered with hose	Distribution hose diameter (mm)	Max working pressure (Mpa)	Media	Distribution hose length (m)	Diameter, connection hose (mm)	Type of hose
	30861484	Yes	10	25	Water high pressure	25	10	G
	30861584[6]	No	10	25	Water high pressure			
	30861684	Yes	25	2	Water, Food	10	25	E
	30861784		19	2	Water, Food	15	19	E
	30861884	Yes	12.5	2	Water, Food	20	12.5	E
	30861984	Yes	25	1,5	Compressed air, Water	10	25	D
	30862084[5]	No	25	1,5	Compressed air, Water			
	30862184	Yes	19	1,5	Compressed air, Water	15	19	D
	30862284[3]	No	19	1,5	Compressed air, Water			
	30862384		12.5	1,5	Compressed air, Water	20	12.5	D
	30862484[4]	No	12.5	1,5	Compressed air, Water			
	30863484[7]	No						
	30863584	Yes	19	5	Oil	20	19	

This content is protected under copyright law, furnished for informational use only, and subject to change without notice. © Nederman Holding AB

Models

	Item no	Delivered with hose	Distribution hose diameter (mm)	Max working pressure (Mpa)	Media	Distribution hose length (m)	Diameter, connection hose (mm)	Type of hose
	30860384[4]	No		1,5	Compressed air, Water			

[1] Without swivel. For 25 mm hose diameter max 10m hose length.
[2] Without swivel
[3] For 19 mm hose
[4] For 12,5 mm hose
[5] For 25 mm hose
[6] For 10 mm hose
[7] For 10 or 12,5 mm hose

Hose types

Hose type	Specification	Temperature range, °C	Hose fittings in free hose end, distribution hose	Hose fitting on free hose end, inlet hose	Hose connection on reel, distribution hose	Hose connection on reel, inlet hose
B	Cover in NBR/PVC and inner tube in NBR. Syntethic textile braid	-30 - 100	Male, chrome plated		Hose nipple + clip	Hose nipple 1/2" + clip
D	Cover in NBR/PVC and inner tube in NBR. Syntethic textile braid	-30 - 100	Male, chrome plated		Hose nipple + clip	Hose nipple + clip
E	Cover in NBR/PVC and inner tube in food grade quality NBR. Syntethic textile braid	-30 - 100	Male 60° cone, chrome plated	Female 60° cone, chrome plated	Male 60° cone	Male 60° cone
G	Cover and inner tube in synthetic rubber. Single steel braid	-40 - 155	Female 60° cone, chrome plated. With rubber hose grip	Female 60° cone, chrome plated	Male 60° cone	Male 60° cone
I	Cover and inner tube in SBR based rubber. Single steel braid	-40 - 100	Female 60° cone, chrome plated	Female 60° cone, chrome plated	Male 60° cone	Male 60° cone
J	Cover and inner tube in syntetic, oil resistant rubber. Double steel braid	-40 - 100	Female 60° cone, chrome plated	Female 60° cone, chrome plated	Male 60° cone	Male 60° cone

This content is protected under copyright law, furnished for informational use only, and subject to change without notice. © Nederman Holding AB

Accessories

	Accessory	Item no
	Roller guide.	30341550
	Water gun in chromium plated brass	30400110
	Water gun in stainless steel	30400210
	Watergun EX	30400211
	High temperature water gun	30400310
	Air gun, standard.	30410110
	Swivelling coupling 3/8(m)-3/8(m)HP	30431310
	Swiv. coupling 3/8(m)-3/8(m) HP SS	30431410
	Swivl. coupl.1/2(m)-3/8(f) brass	30431510
	Swivl.coupl.1/2(m)-1/2(f) brass	30431610
	Swivel coupling 1/2(m)- 3/4 (f) bra	30431710
	Swivl. coupl. 1/2(m)-3/8(f) SS	30431810
	Swivl coupl. 1/2(m)-1/2(f) SS	30431910

This content is protected under copyright law, furnished for informational use only, and subject to change without notice. © Nederman Holding AB

Accessories

	Accessory	Item no
	Swivl.coupl.1/2(m)-3/4(f) SS	30432010
	Pivoting Wall bracket FZB	30373667
	Inlet kit for hose reel 1/2"	30511550
	Inlet kit for hose reel	30511650
	Pivoting Wall bracket RF	30373668

This content is protected under copyright law, furnished for informational use only, and subject to change without notice. © Nederman Holding AB

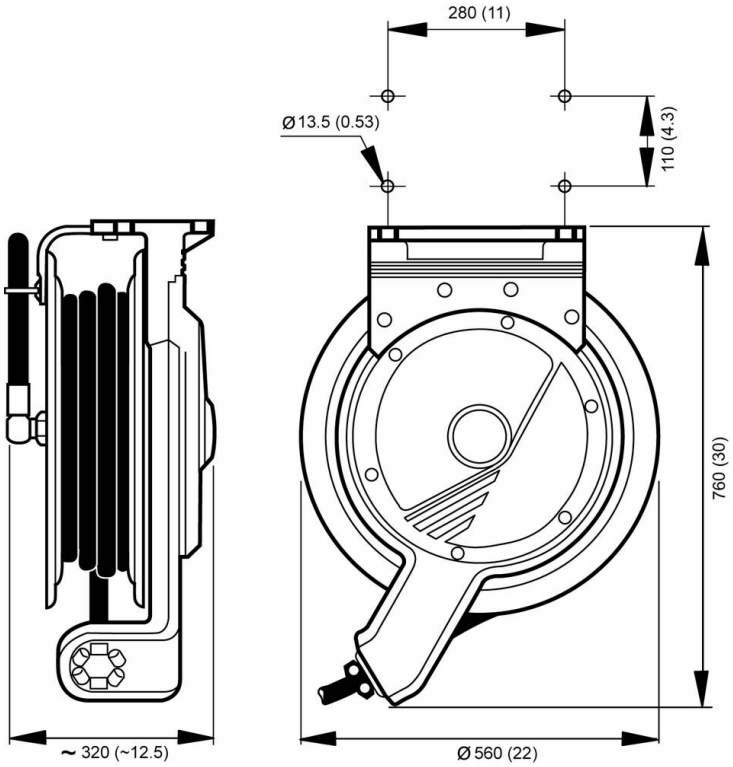

This content is protected under copyright law, furnished for informational use only, and subject to change without notice. © Nederman Holding AB