Product leaflet

NRSZ rotary valves, type 4,10,20,30

Continuously empty combustible dust from your dust collector

This content is protected under copyright law, furnished for informational use only, and subject to change without notice. © Nederman Holding AB

NRSZ rotary valves, type 4,10,20,30

The NRSZ type rotary valve is used to transfer material between two separate systems. In pneumatic conveying systems discharge is usually required from the filter or cyclone to the silo, at atmospheric pressure. This is an ideal application for the NRS type rotary valve.

The rotary valve can be used for most material types, though the particle size must not exceed 13 x 13 x 13 mm (.5 x .5 x .5 in). The rotary valve should not work with highly abrasive dust.

The NRSZ type rotary valve is modular and robustly constructed in heavy steel plate. The rotor of each module is equipped with a clutch. This reduces the possibility of damage in use and maximises the life of the unit. The rotor has special rubber seals, which provide an effective air lock between the inlet and the outlet. The rotary valve should not work with capacity more than 60% of max.

This type of rotary valve is a certified version for explosive dusts type St1 and St2. The NRSZ is a protective system according to ATEX definition.

Explosive dusts type St1 may have Kst up to 200 bar m/s.

Explosive dusts type St2 may have Kst up to 300 bar m/s.

This content is protected under copyright law, furnished for informational use only, and subject to change without notice. © Nederman Holding AB

NRSZ rotary valves, type 4,10,20,30

Certifications	[ce], [ex]
Protection class	IP55
Installation	[Outdoor], [Indoor]
[ProductSuitableForCombustableDust]	True
Application	[dust]
Operating Temperature	-4 to 104 F (-20 °C to +40 °C)

This content is protected under copyright law, furnished for informational use only, and subject to change without notice. © Nederman Holding AB

Models

	Item no	Weight (lbs)	Power (Hp)
	73008867[1]	50	
	73008868[2]	75	0.25 (0,18 kW)
	73008870[2]	75	0,18
	73008871[2]	75	0,18
	73008875[3]	130	0,18
	73008877[3]	130	0,18
	73008878[3]	130	0,18
	73008874[4]	95	
	73008876[5]	135	0,75
	73008879[5]	135	
	73008880[5]	135	
	73008881[6]	221	
	73008882[7]	243	0,75

This content is protected under copyright law, furnished for informational use only, and subject to change without notice. © Nederman Holding AB

Models

	Item no	Weight (lbs)	Power (Hp)
	73008883[8]	243	
	73009037		
	73008884[9]	312	
	73008885[10]	338	0,75
	73009038		
	73009039		

[1] Without motor. Capacity at 100% filling - 1,50m3/h per RPM
[2] Capacity at 100% filling - 10 m3/h
[3] Capacity at 100% filling - 24 m3/h
[4] Without motor. Capacity at 100% filling - 3,5 m3/h per RPM
[5] Capacity at 100% filling - 67 m3/h
[6] Without motor. Capacity at 100% filling - 7 m3/h per RPM
[7] Capacity at 100% filling - 134 m3/h
[8] capacity at 100% filling - 134 m3/h
[9] Without motor. Capacity at 100% filling - 10,5 m3/h per RPM
[10] Capacity at 100% filling - 201 m3/h

This content is protected under copyright law, furnished for informational use only, and subject to change without notice. © Nederman Holding AB

Accessories

	Accessory	Item no
	Rotation sensor for NRS with assembly kit	73008689

This content is protected under copyright law, furnished for informational use only, and subject to change without notice. © Nederman Holding AB

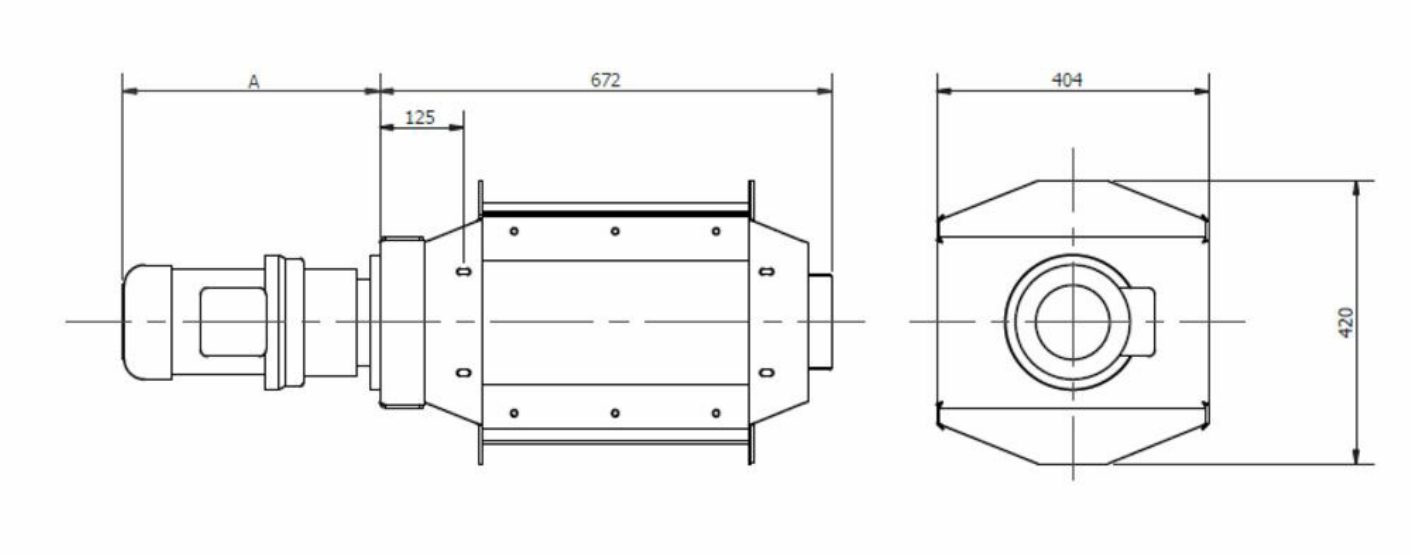

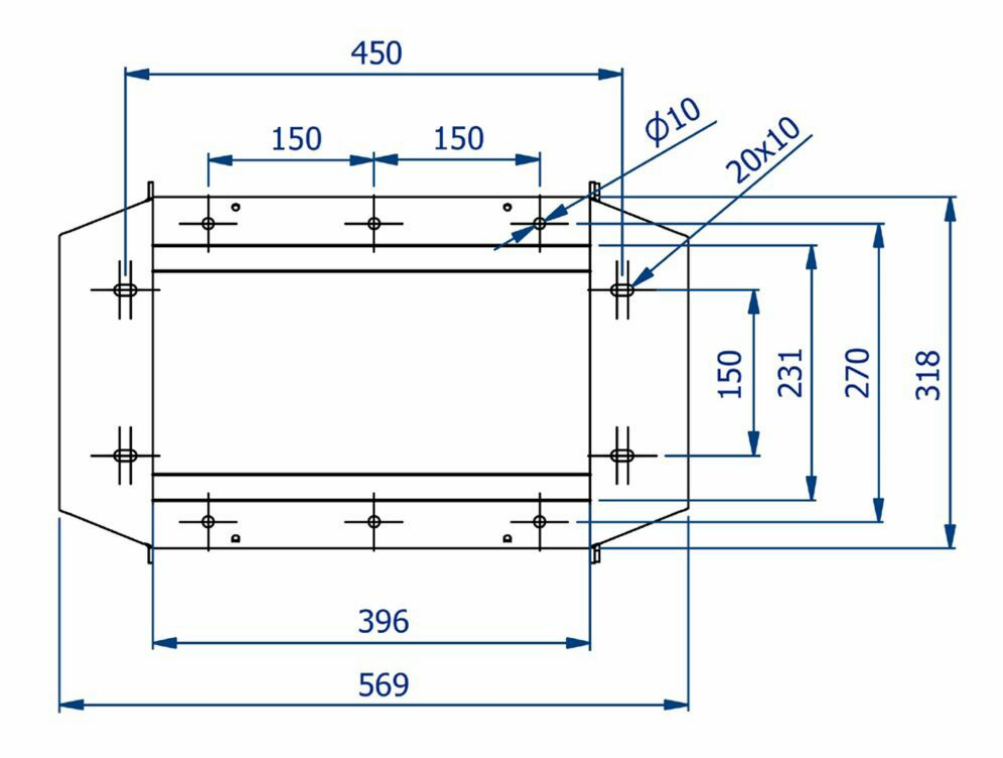

This content is protected under copyright law, furnished for informational use only, and subject to change without notice. © Nederman Holding AB

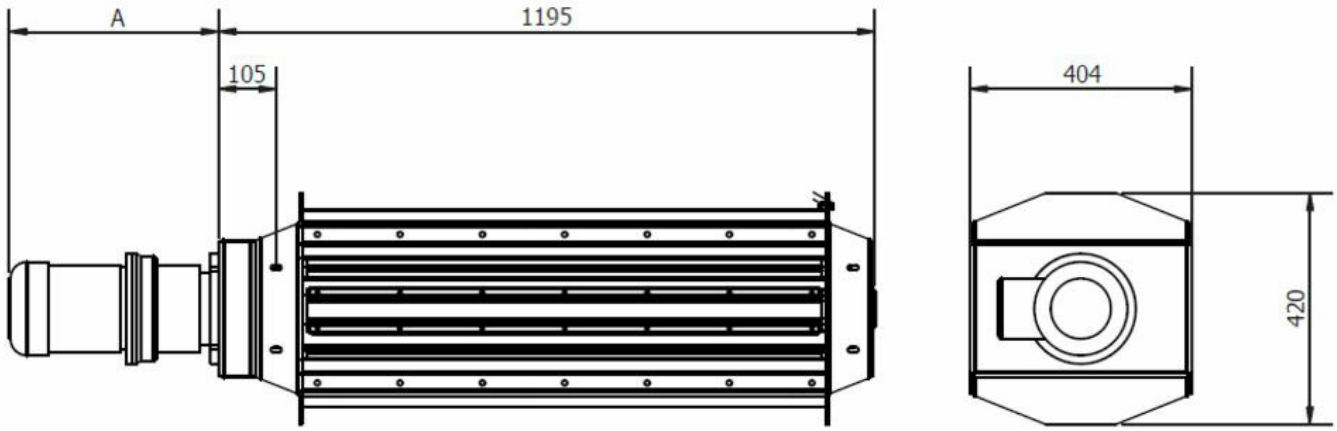

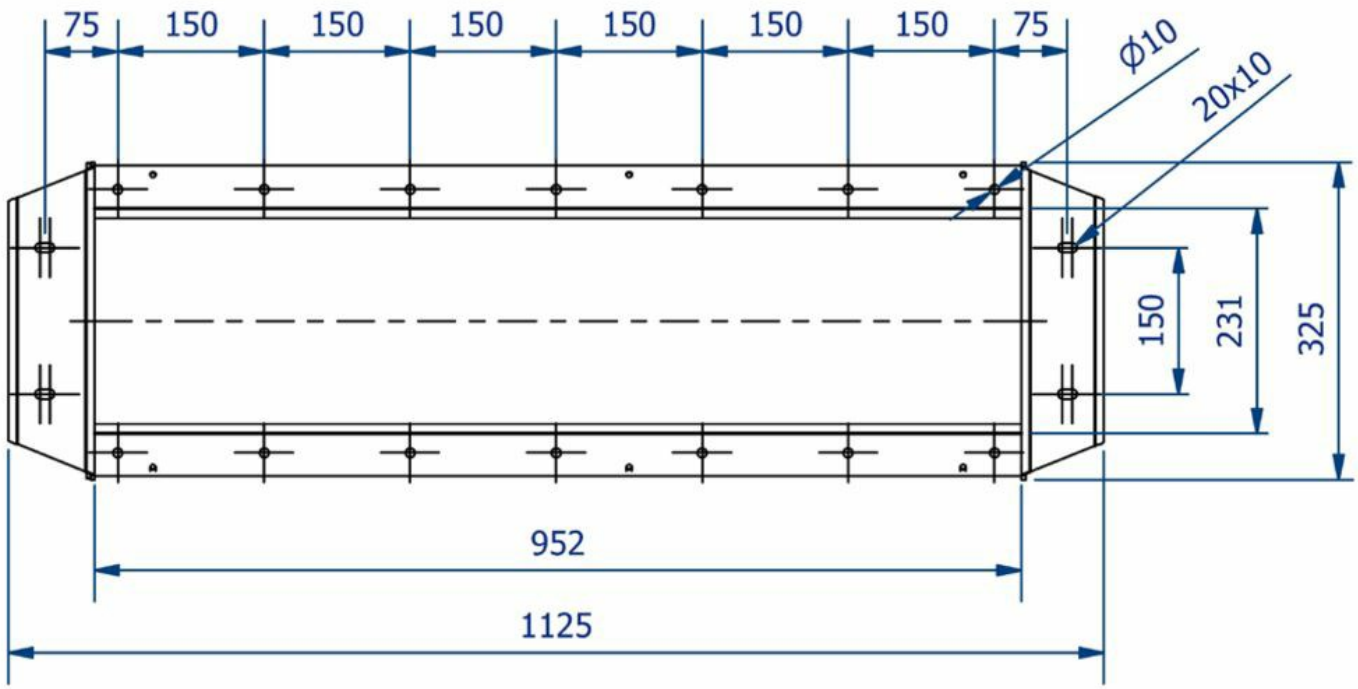

This content is protected under copyright law, furnished for informational use only, and subject to change without notice. © Nederman Holding AB

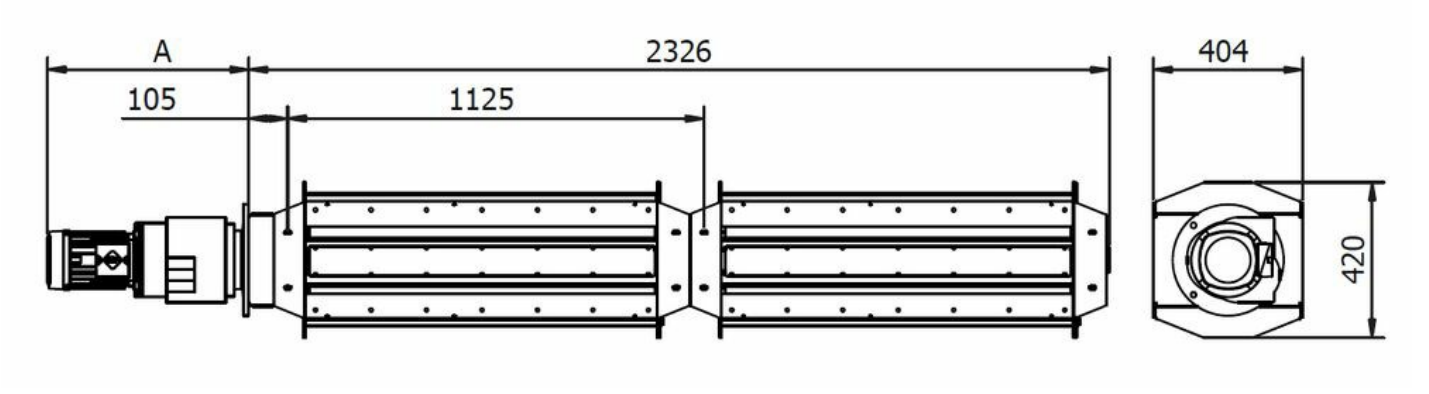

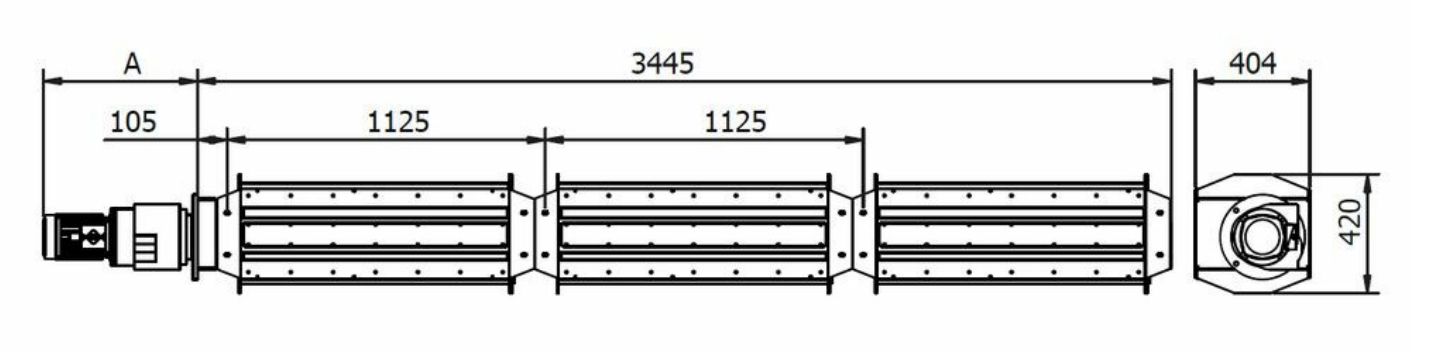

This content is protected under copyright law, furnished for informational use only, and subject to change without notice. © Nederman Holding AB

Atex limitations

Rotary valve type	$p_{red.max}$ [kPa]		Rotation speed max. [rpm]
	St1 Kst_{max}*=20 MPa · m/s	St2 Kst_{max}*=30 MPa · m/s	
NRSZ 4	25	20	20
NRSZ 10	25	20	20
NRSZ 20	25	20	20
NRSZ 30	25	20	20

*Kst for organic dust.

The combustible dust is described by the parameters:
The limit values of the used class of dust St1: Kst_{max}=20 MPa·m/s, MIE ≥13 mJ, MIT ≥430°C (of a dust cloud).
The limit values of the used class of dust St2: Kst_{max}=30 MPa·m/s, MIE ≥2 mJ, MIT ≥520°C (of a dust cloud).

ID	Type model - rpm	Installation zone exterior of NRSZ	Capacity at 100% filling	Motor [kW]	Motor ATEX Marking	Weight [kg]
73008867	NRSZ 4-0	Depends on motor	1,5 m^3/h per RPM	none	-	50
73008868	NRSZ 4-7	Non-zone	10 m^3/h	0,18	-	75
73009028	NRSZ 4-20		28 m^3/h	0,75	-	69
73008874	NRSZ 10-0	Depends on motor	3,5 m^3/h per RPM	none	-	95
73008875	NRSZ 10-7	Non-zone	24 m^3/h	0,18	-	130

This content is protected under copyright law, furnished for informational use only, and subject to change without notice. © Nederman Holding AB

ID	Type model - rpm	Installation zone exterior of NRSZ	Capacity at 100% filling	Motor [kW]	Motor ATEX Marking	Weight [kg]
73008876	NRSZ 10-20		67 m^3/h	0,75	-	135
73008881	NRSZ 20-0	Depends on motor	7 m^3/h per RPM	none	-	221
73008882	NRSZ 20-20	Non-zone	134 m^3/h	0,75	-	243
73008884	NRSZ 30-0	Depends on motor	10,5 m^3/h per RPM	none	-	312
73008885	NRSZ 30-20	Non-zone	201 $m^3/$	0,75	-	338
73008870	NRSZ 4-7 Cat 2	Zone 21	10 m^3/h	0,18	II 2D Ex tb IIIC T135°C Db	75
73008871	NRSZ 4-7 Cat 3	Zone 22			II 3D Ex tc IIIB T125°C Dc	75
73009029	NRSZ 4-20 Cat 2	Zone 21	28 m^3/h	0,75	II 2D Ex tb IIIC T135°C Db	69
73009030	NRSZ 4-20 Cat 3	Zone 22			II 3D Ex tc IIIB T125°C Dc	69
73008877	NRSZ 10-7 Cat 2	Zone 21	24 m^3/h	0,18	II 2D Ex tb IIIC T135°C Db	130
73008878	NRSZ 10-7 Cat 3	Zone 22			II 3D Ex tc IIIB T125°C Dc	130
73008879	NRSZ 10-20 Cat 2	Zone 21	67 m^3/h		II 2D Ex tb IIIC T135°C Db	135
73008880	NRSZ 10-20 Cat 3	Zone 22			II 3D Ex tc IIIB T125°C Dc	135
73008883	NRSZ 20-20 Cat 2	Zone 21	134 m^3/h		II 2D Ex tb IIIC T135°C Db	243

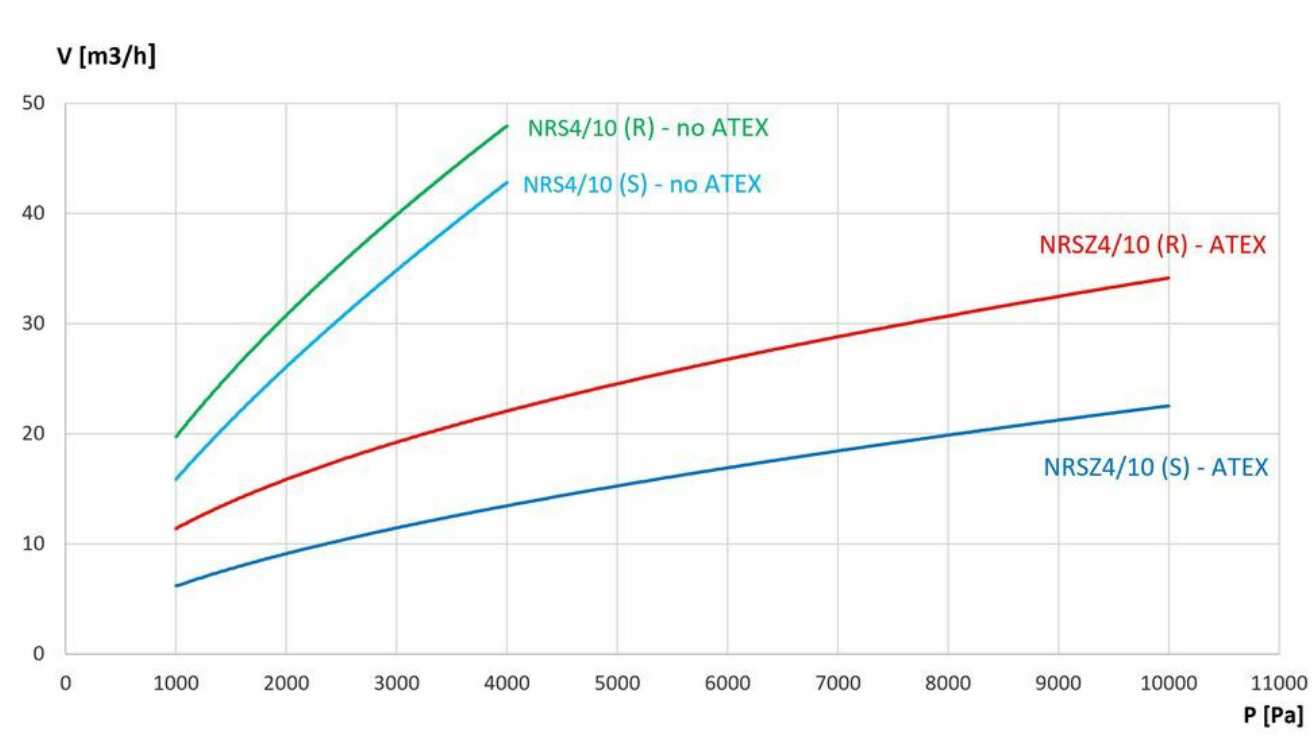

This content is protected under copyright law, furnished for informational use only, and subject to change without notice. © Nederman Holding AB