Product leaflet

NRS rotary valves type 4,10,20 and 30

Continuous emptying of the dust collector hopper.

This content is protected under copyright law, furnished for informational use only, and subject to change without notice. © Nederman Holding AB

NRS rotary valves type 4,10,20 and 30

- Robust construction.
- Long lifetime. The rotor is equipped with an elastic clutch, which reduces the possibility of damage in use and maximizes the life of the unit.
- Effective air lock between the inlet and outlet provided due to the special rubber blends.

The NRS type rotary valve is used to transfer material between two separate systems. In pneumatic conveying systems, discharge is usually required from the filter or cyclone to the silo, at atmospheric pressure. This is an ideal application for the NRS type rotary valve.

The rotary valve can be used for emptying of several non-adhesive material types. Max. particle size for the NRSZ is 13 x 13 x 13 mm.
The rotary valve should not work with highly abrasive dust.

This content is protected under copyright law, furnished for informational use only, and subject to change without notice. © Nederman Holding AB

NRS rotary valves type 4,10,20 and 30

Certifications	CE
Classe de protection	IP55
Installation	Extérieur, Intérieur
Convient pour les poussières combustibles	False
[ProductApplication]	Poussière

This content is protected under copyright law, furnished for informational use only, and subject to change without notice. © Nederman Holding AB

Models

	Item number	Poids (kg)	Puissance (kW)
	73009015[1]	50	
	73009016[2]	67	0,18
	73009018[3]	67	0,75
	73009019[4]	107	
	73009021[5]	124	0,75
	73009022[6]	214	
	73009024[7]	243	0,75
	73009025[8]	321	
	73009027[9]	338	0,75

[1] Capacity at 100% filling - 2 m3/h per RPM
[2] Capacity at 100% filling - 14 m3/h
[3] Capacity at 100% filling - 65 m3/h
[4] Without motor. Capacity at 100% filling - 4,9 m3/h per RPM
[5] Capacity at 100% filling - 157 m3/h
[6] Without motor. Catacity at 100% filling 9,8 m3/h per RPM
[7] Capacity at 100% filling - 314 m3/h
[8] Without motor. Capacity at 100% filling - 14,7 m3/h per RPM
[9] Capacity at 100% filling - 471 m3/h

This content is protected under copyright law, furnished for informational use only, and subject to change without notice. © Nederman Holding AB

Accessories

	Accessory	Item number
	Capteur de rotation pour NRS avec kit d'assemblage	73008689
	Tool for setting the rotor in NRSZ4/10	73008777

This content is protected under copyright law, furnished for informational use only, and subject to change without notice. © Nederman Holding AB

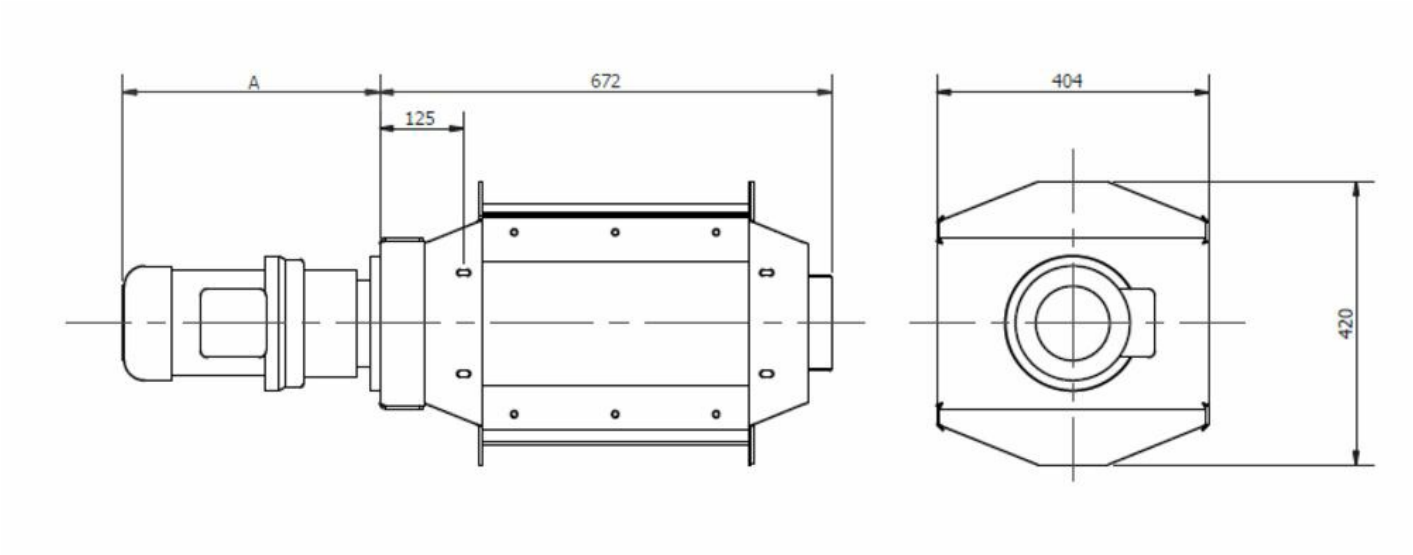

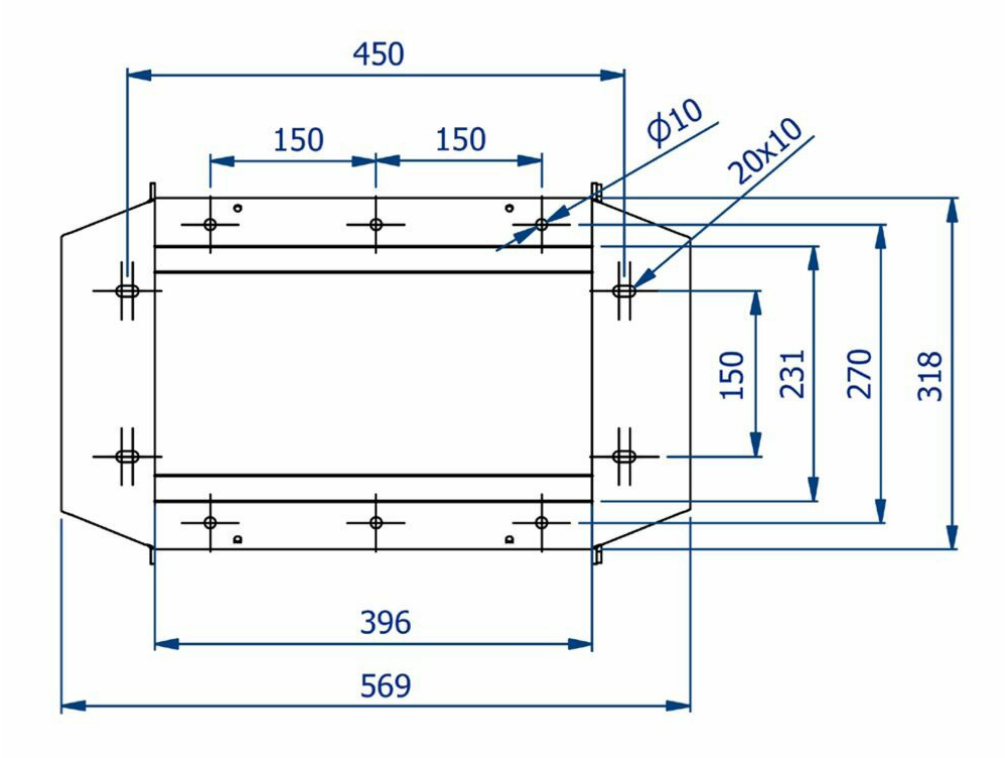

This content is protected under copyright law, furnished for informational use only, and subject to change without notice. © Nederman Holding AB

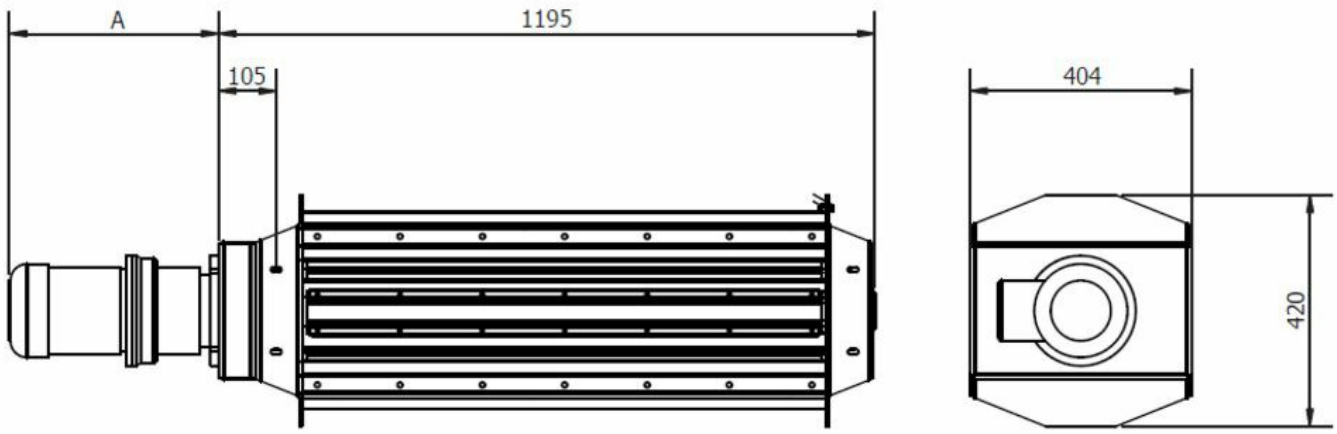

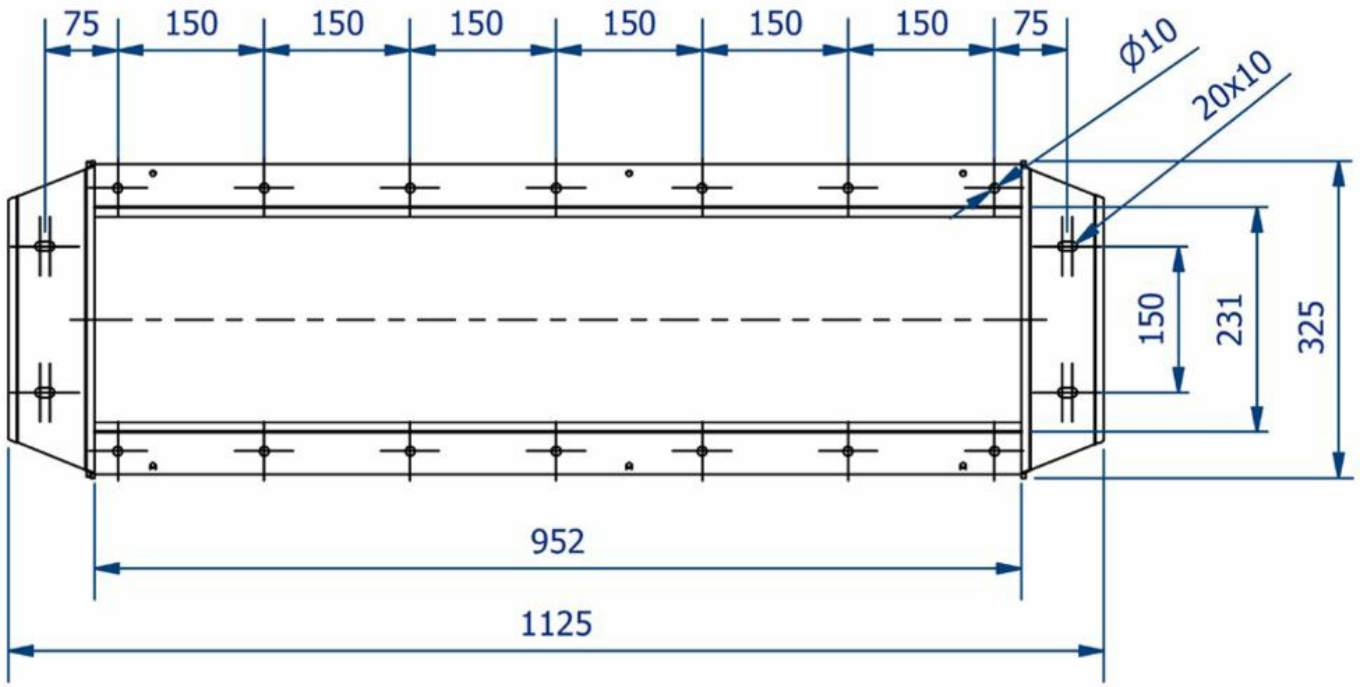

This content is protected under copyright law, furnished for informational use only, and subject to change without notice. © Nederman Holding AB

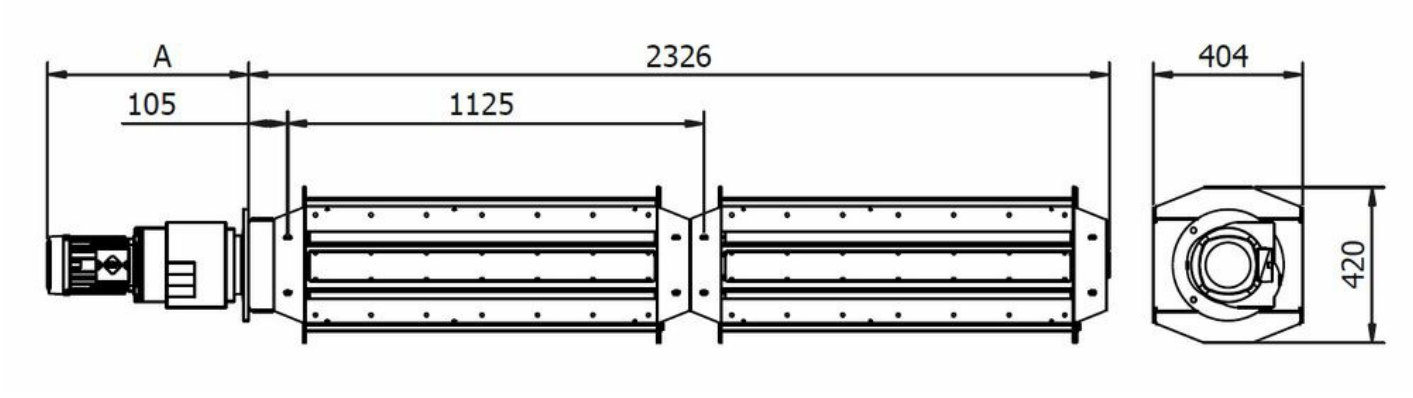

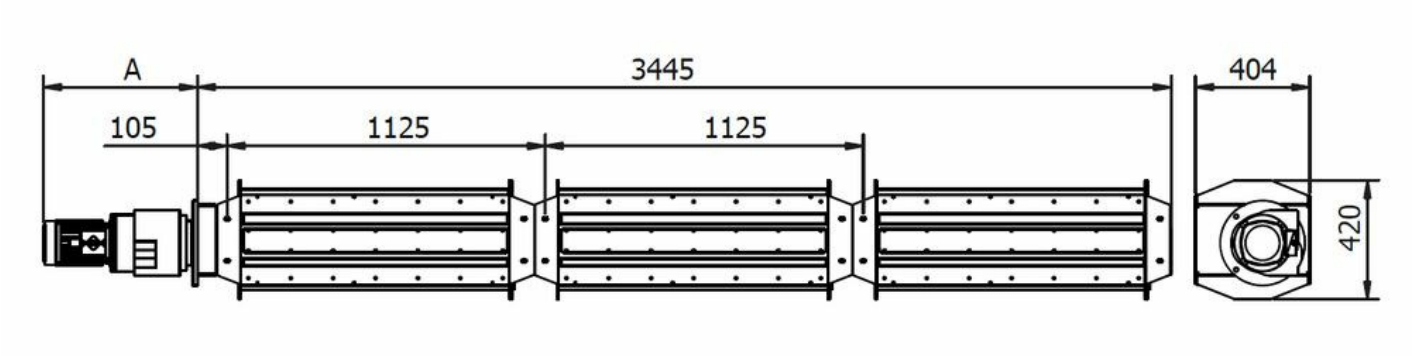

This content is protected under copyright law, furnished for informational use only, and subject to change without notice. © Nederman Holding AB

Leakage

The leakage of the rotary valve during shutdown (S) and during operation (R) depends on the pressure drop over the rotor. See the chart:

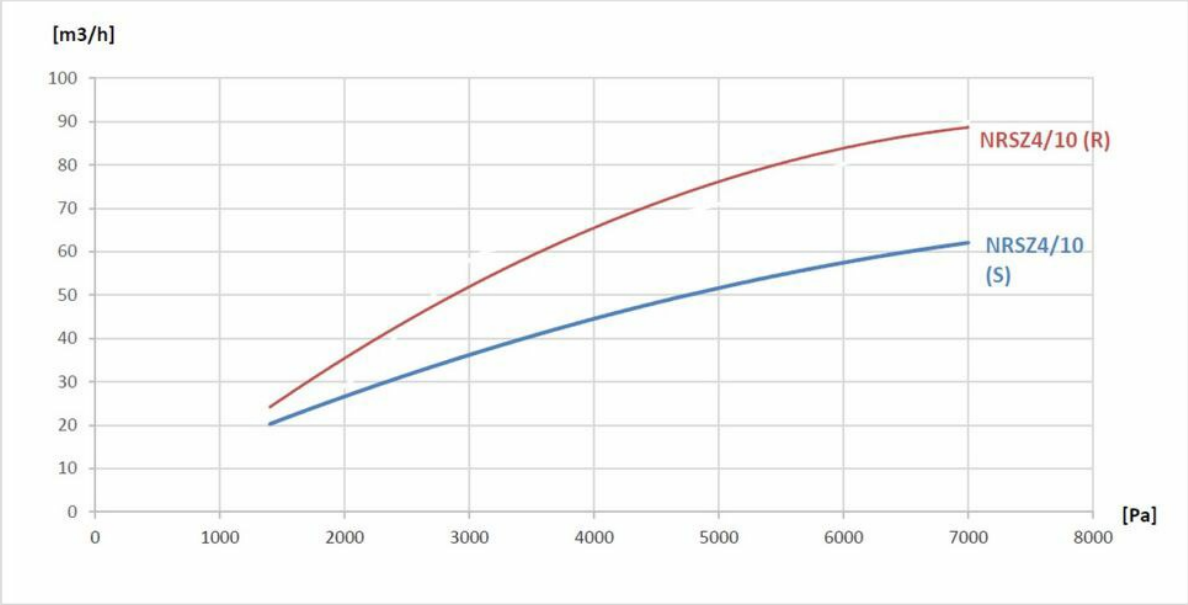

This content is protected under copyright law, furnished for informational use only, and subject to change without notice. © Nederman Holding AB