Product leaflet

Data Cable Reel D20

Cable reel with Cat7 Ethernet cable. Durable, safe and with smart design.

This content is protected under copyright law, furnished for informational use only, and subject to change without notice. © Nederman Holding AB

Data Cable Reel D20

- Durable: Made with resistant composite material and high quality components.
- Safe: spring and electronic components properly protected for safe usage and servicing.
- Smart: designed for easy connection of cables.
- Stable: Cat7 ethernet cables gives stability to data transfer.
- Certified: according to Industrial Cable Reel Directive SS-EN 61316.

A reliable network connection is an essential part of every company's infrastructure. Although a wireless connection is a good complement, for maximum speed, stability and security, a fixed connection is still the best option.

The D20 has been designed to withstand heavy usage in environments such as vehicle workshops, hardware labs, data centers, among others.

This content is protected under copyright law, furnished for informational use only, and subject to change without notice. © Nederman Holding AB

Data Cable Reel D20

[ProductCertifications]	[ce]

This content is protected under copyright law, furnished for informational use only, and subject to change without notice. © Nederman Holding AB

Models

	Item no	[ItemHoseMedia]	[ItemCorrosionResistance]	[ItemElectricSpringDriven]	[ItemDistributionCableType]
	30709020	[dataethernet]	[Standard]	[Spring]	
	30708020[1]	[dataethernet]	[Standard]	[Spring]	Cat7, Zwart

[1] Max speed 1Gb

This content is protected under copyright law, furnished for informational use only, and subject to change without notice. © Nederman Holding AB

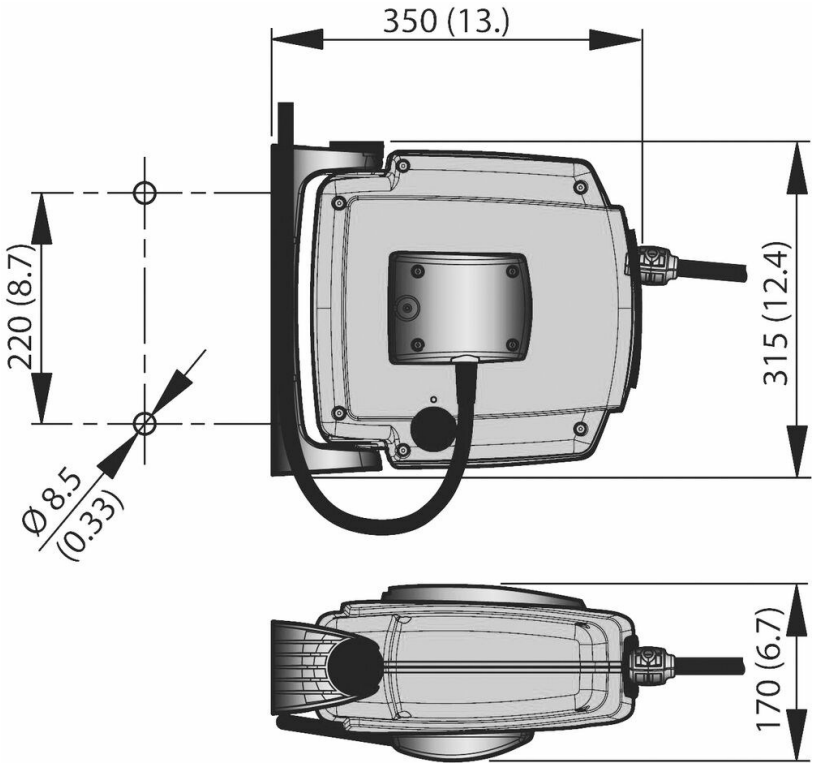

This content is protected under copyright law, furnished for informational use only, and subject to change without notice. © Nederman Holding AB