Product leaflet

MEP SmartFilter

The MEP SmartFilter is suitable for different dust types and can be used in several different application such as grinding, shot blasting and general dust.

This content is protected under copyright law, furnished for informational use only, and subject to change without notice. © Nederman Holding AB

MEP SmartFilter

- Gain control over filtration performance with Insight Analytics. Nederman's unique monitoring technology
- Optimized footprint through innovative envelope design with medium airflow
- Reduced TCO through intelligent cleaning system, long filter life-time and optimized footprint
- Future Proof system that is IoT prepared– Insight Ready

MEP SmartFilter is a multi-purpose filtration system. It is customizable to perfectly fit customer specific demands. Suitable for different dust types and can be used in several different applications such as grinding, shot blasting and general dust.
The modular design allows for standalone solutions as well as multi-filter solutions for extended requirements. The MEP dust collector uses our long established fabric envelopes that are easily maintained through the front hinged doors.
Filter envelope materials for most applications are available, dependent on dust type, dust load and efficiency requirements.
Constructed in 2 mm galvanized steel panels, it is easy to install, cost effective to ship and provides corrosion protection. The design is optimized for long filter lifetime providing low cost of ownership.
Insight ready control with advanced pulse cleaning logic provides for full system operation including control and monitoring, as well as gateway functionality for cloud communication.
The MEP SmartFilter has a large accessories program including; fans, inlets, bins etc. and the envelopes are available in a wide variety of materials.

This content is protected under copyright law, furnished for informational use only, and subject to change without notice. © Nederman Holding AB

MEP SmartFilter

Certifications	CE
Compressed air consumption	58 litres per cleaning pulse at 5,5 bar compressed air
Installation	Indoor, Outdoor
Material	2 mm galvanised sheet metal
Suitable for combustible dust	False
Filter cleaning method	Pulse jet
Application	Fumes, Dust

This content is protected under copyright law, furnished for informational use only, and subject to change without notice. © Nederman Holding AB

Models

	Item no	Filter type	Number of filter elements
	MEP-4-4[1]	[casette]	4
	MEP-6-4	[casette]	6
	MEP-8-4	[casette]	8
	MEP-2-6	[casette]	2
	MEP-4-6	[casette]	4
	MEP-6-6	[casette]	6
	MEP-8-6	[casette]	8
	MEP-2-4	[bag], [casette]	2

[1] Configurable product

This content is protected under copyright law, furnished for informational use only, and subject to change without notice. © Nederman Holding AB

MEP-2-4 / MEP-2-4-Ex
MEP-2-6 / MEP-2-6-Ex

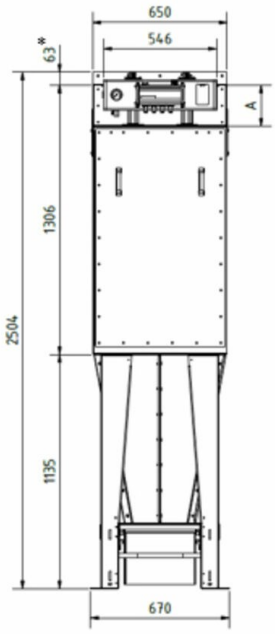

All dimensions in mm. If 50 liter bin with wheels 90 mm must be added to the height. * to be included only if a top mounted FM fan is used (transition for fan).

MEP-6-4 / MEP-6-4-Ex
MEP-6-6 / MEP-6-6-Ex

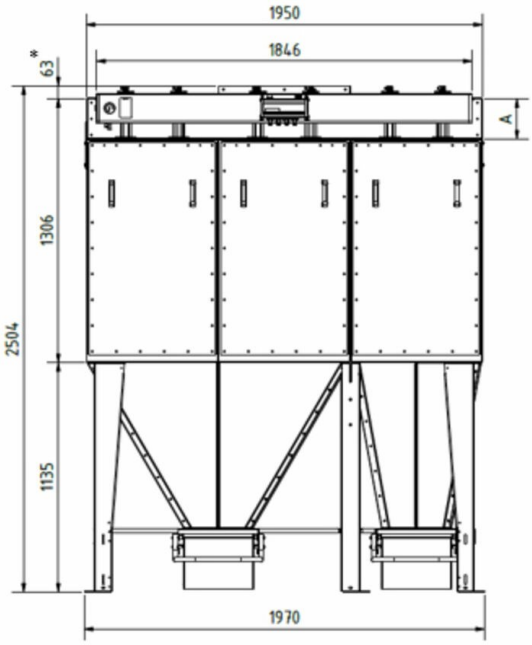

All dimensions in mm. If 50 liter bin with wheels 90 mm must be added to the height. * to be included only if a top mounted FM fan is used (transition for fan).

This content is protected under copyright law, furnished for informational use only, and subject to change without notice. © Nederman Holding AB

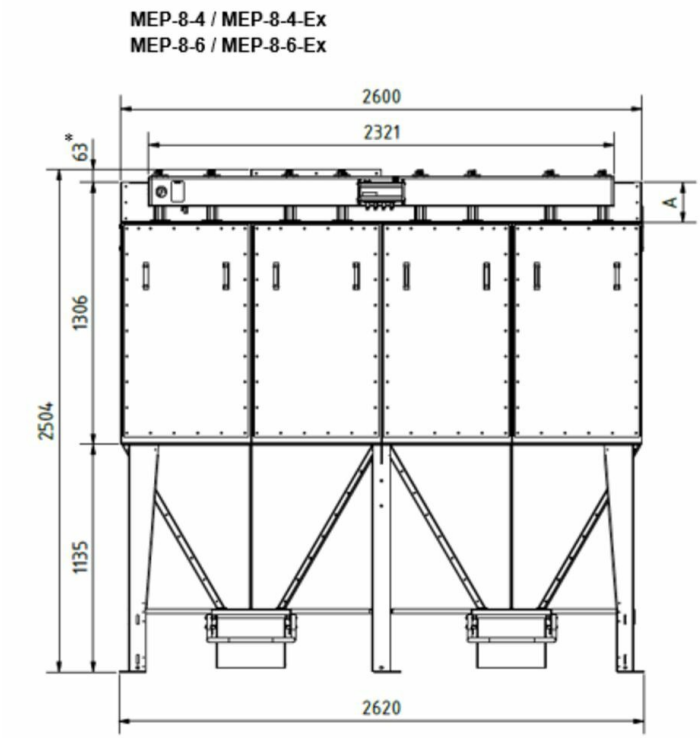

All dimensions in mm. If 50 liter bin with wheels 90 mm must be added to the height. * to be included only if a top mounted FM fan is used (transition for fan).

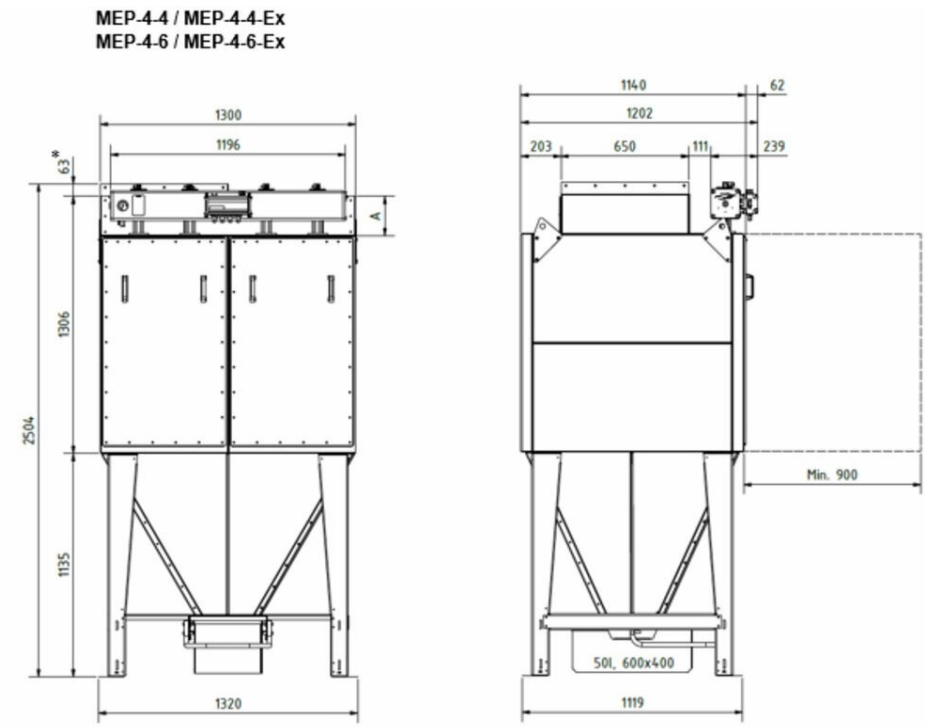

All dimensions in mm. If 50 liter bin with wheels 90 mm must be added to the height. * to be included only if a top mounted FM fan is used (transition for fan).

This content is protected under copyright law, furnished for informational use only, and subject to change without notice. © Nederman Holding AB

Envelope material

- NF100 – Polyester needlefelt, singed, 500 g/m²
- NF130 – Polyester needlefelt, glazed, 500 g/m²
- NF141 – Polyester needlefelt, glazed, 400 g/m², antistatic
- NF142 – Polyester needlefelt, glazed, 500 g/m², antistatic
- NF143 – Polyester needlefelt, PTFE coating, 550 g/m², antistatic
- NF180 – Polyester needlefelt, glazed, 550 g/m²
- NF181 – Polyester needlefelt, PTFE coating, 550 g/m²

MCP Envelope material

Filter area

Filter type	Quantity of envelopes	Filter area (m²)	Max. airflow (m³/h)*
MEP-2-4 MEP-2-4-Ex	2	15	1800
MEP-4-4 MEP-4-4-Ex	4	29	3400
MEP-6-4 MEP-6-4-Ex	6	44	5200
MEP-8-4 MEP-8-4-Ex	8	58	7000
MEP-2-6 MEP-2-6-Ex	2	22	2600
MEP-4-6 MEP-4-6-Ex	4	44	5200
MEP-6-6 MEP-6-6-Ex	6	66	8000
MEP-8-6 MEP-8-6-Ex	8	88	10500

*Max. air flow is dependent on the dust type, etc.

MEP Filter area

This content is protected under copyright law, furnished for informational use only, and subject to change without notice. © Nederman Holding AB

A – Height of Clean Air Chamber (mm)			
200	350	500	650
Shown in drawings	Add 150 mm in height	Add 300 mm in height	Add 450 mm in height

MEP A - height of clean air chamber

Accessories

Figure	Description	Figure	Description
	Top mounted FM-fans 50 Hz or 60 Hz up to 14000 m³/h	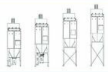	Leg height extensions from 0 mm to 2000 mm to fit larger bins/containers, rotary valves and big bags
	Combifab remote fans 50 Hz or 60 Hz		Leg width extension 300 mm to left, right or both sides to fit larger bins/containers, rotary valves and big bags
	Noise enclosure to reduce fan and motor break-out-noise of FM-fans		Suspension below rotary valve for big bag
	Dual silencer to reduce air flow, fan noise and motor break-out-noise of FM-fans (available with grid (indoor use), grid and rain cover (outdoor use) or flange for duct connection)		Isolation box for pressure tank incl. cleaning valves
	Regulation (iris) damper at fan inlet for FM-fans		Access platform with ladder for maintenance
	Dust bins (50 l, 50 l with wheels and 100 l with wheels)		Lime feeder NFKG-70
	Plastic bag in the dust bin with pressure compensation set 'bin balancing'		Several sensors available for extraction, filtration and discharge process
	Rotary valves NRS3 and NRSZ3		Water separator and pressure regulator
	Dust discharge valve NFUS3		QF-duct system

This content is protected under copyright law, furnished for informational use only, and subject to change without notice. © Nederman Holding AB