Nederman

Original operating manual
EN USER MANUAL

Operating manual

Cartridge filter

FlexFilter
13-18 (EX)

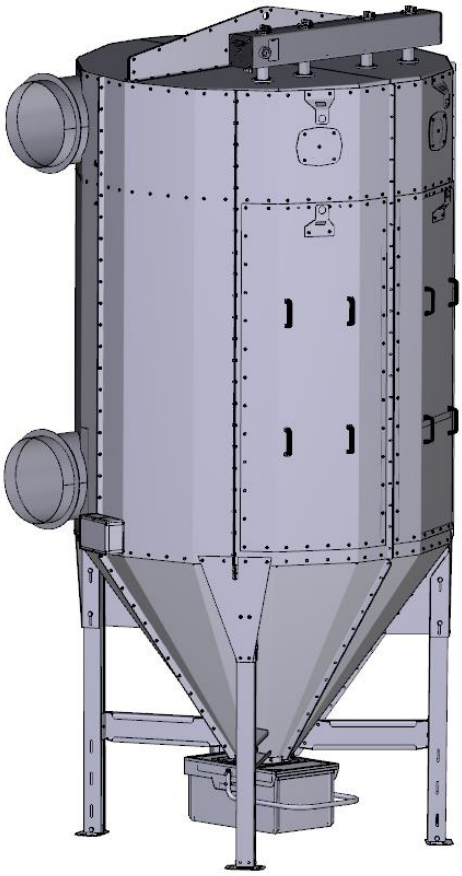

Imprint

Publisher/Manufacturer

NEDERMAN Manufacturing Poland Sp. z o. o.
Ul. Okólna 45 A
05-270 Marki, Poland
☏ : +48 22 7616000
🖷 : +48 22 7616099
🌐 : www.nederman.com.pl

Spare part service

@ : CSG.Marki@Nederman.pl

Copyright

The copyright for this manual remains with the company NEDERMAN Manufacturing Poland Sp. z o. o.

This manual is to be treated in confidence. It is to be used exclusively within your company by persons authorized to do so. Allowing third parties to access this manual is forbidden. All documents are protected as defined by copyright protection law.

Forwarding and reproduction of documents, including parts thereof, as well as the utilization and disclosure of their contents is prohibited unless our express permission has been obtained. Contraventions of copyright law are punishable and subject to obligatory payment of damages.

All rights are reserved in respect of exercising industrial property rights.

This manual has been prepared with the utmost care and attention. We do not accept liability for any faults contained therein. Liability will be excluded wherever legally permissible for direct and indirect damage in connection with the supply and application of this manual.

Table of contents

1 Concerning this manual ... 6
1.1 Purpose ... 6
1.2 Validity ... 6
1.3 Defining target groups ... 6
1.4 Symbols ... 7
2 Field of application and technical data ... 8
2.1 Field of application ... 8
2.1.1 Intended use ... 8
2.2 Rating plates ... 9
2.2.1 Technical data of the filter ... 10
2.2.2 Technical data of the filter controller ... 11
2.3 Electric connection conditions ... 12
2.4 Operating pressure and compressed air quality ... 12
3 Fundamental safety instructions ... 13
3.1 Product safety ... 13
3.2 Tasks of the operator ... 13
3.2.1 Staff selection and qualifications ... 13
3.3 Safety measures by personnel ... 14
3.3.1 Safety-conscious work behaviour ... 14
3.3.2 Operator's tasks ... 14
3.4 Risks ... 14
3.5 Technical components of the safety system ... 14
3.5.1 Protective facilities ... 14
3.5.2 Danger, warning and information ("Note") signs ... 15
3.6 Fire protection ... 15
3.6.1 Action in the event of fire ... 15
4 Explosion protection ... 17
4.1 ATEX designation ... 18
4.2 Establishment and marking of the safety zone ... 19
4.3 Establishment and marking of the safety zone – flameless pressure relief devices ... 19
4.4 Conduct in the safety zone ... 20
4.5 Equipment ... 20
4.6 Preventive measures ... 20
4.7 Measures following an explosion ... 20
4.8 Use of tools in areas with potentially explosive atmosphere ... 21
5 Structure and function ... 22
5.1 Structure ... 22
5.2 Structure – standard filter ... 22
5.3 Structure – rotary valve filter ... 23
5.4 Structure – filter with rotary valve and BIG-BAG ... 23
5.5 Function ... 24
5.6 Description of the components ... 25
5.6.1 Filter ... 25
5.6.2 Single flap valve ... 27
6 Operation Site ... 28
6.1 Location and foundation requirements ... 28
6.2 Permissible ambient conditions ... 28
7 Transport and delivery ... 29
7.1 Transport ... 29
7.1.1 Component supply ... 29
7.1.2 Transport by pallet truck or fork-lift truck ... 29
7.1.3 Transport by crane ... 29
7.2 Packaging ... 30
7.3 Checking supplied components ... 30
8 Storage and Conservation ... 31
8.1 Storage of components ... 31
8.2 Conservation of the machine/plant ... 31
8.2.1 Maintenance and inspection of the conserved machine / plant ... 31
8.2.2 Measures prior to commissioning after shutdown ... 31
9 Assembly ... 32

9.1 Tightening the screws ... 32
9.2 Earthing of the components ... 32
9.3 Tools ... 32
9.4 Filter ... 33
9.4.1 Filter controller ... 34
9.4.2 Filter controller ... 34
9.4.3 Filter controller ... 34
9.4.4 Differential pressure measurement hose connectors ... 35
9.4.5 Dust container ... 35
9.4.6 Compressed air connection ... 36
9.4.7 Power supply connection ... 36
9.4.8 Burst sensor - applies to filters in the Atex version ... 37
9.5 Earthing of the machine/plant ... 37
10 Initial commissioning ... 38
10.1 Preparatory activities ... 38
11 Operation ... 39
11.1 Plant start-up ... 39
11.2 Plant shutdown ... 39
11.3 Temperature monitoring ... 40
11.4 Fault indicator ... 40
11.5 Control and indicator elements ... 40
11.5.1 Control elements ... 40
11.5.2 Indicator lights ... 41
11.6 Filter controller ... 41
11.6.1 Unit description ... 41
11.6.2 Terminal diagrams ... 42
11.6.3 Connection of differential pressure measurement cables ... 44
11.6.4 Settings ... 45
11.6.5 Operating modes ... 49
11.6.6 Text messages on the display ... 53
12 Parameter list ... 55
13 Troubleshooting ... 56
13.1 Behaviour in event of faults ... 56
13.2 Troubleshooting with the power supply switched on ... 57
13.3 Checklists in event of faults ... 57
13.3.1 Filter ... 58
13.3.2 Filter controller ... 59
13.3.3 Explosion vent – for the Atex version filter ... 60
13.3.4 Pressure release valve ... 60
13.3.5 Electric drives ... 60
14 Maintenance ... 62
14.1 Safety instructions ... 64
14.2 Checklists for maintenance ... 66
14.2.1 Filter ... 66
14.2.2 Filter controller ... 67
14.2.3 Explosion vent – for the Atex version filter ... 67
15 Repair ... 68
15.1 Safety instructions ... 68
15.1.1 Replace filter cartridge ... 70
15.1.2 Replace filter module ... 71
15.1.3 Replace diaphragm ... 72
15.1.4 Residual dust disposal ... 73
16 Spare parts stock ... 74
16.1 Spare parts lists ... 74
16.1.1 Inspection door ... 75
16.1.2 Cartridge filter module ... 75
16.1.3 Cassette filter module ... 77
16.1.4 Securing arm ... 77
16.1.5 Compressed air facility ... 78
16.1.6 Filter controller ... 78
16.1.7 Filter controller ... 78
16.1.8 Differential pressure measurement ... 79
16.1.9 Residual dust disposal ... 79

16.1.10 Accessories 80
17 Decommissioning and Dismantling 81
17.1 Decommissioning 81
17.2 Dismantling 82
18 Disposal 83
19 Appendix 83
19.1 Warranty 83
19.2 Liability restrictions 84
20 Supplier documentation 84

1 Concerning this manual

1.1 Purpose

This manual is a part of the machine/plant and describes its safe and proper use during all operating phases.

➔ Read the manual carefully before using the machine/plant.
➔ Keep the manual in a safe place for the duration of the machine/plant's service life.
➔ Make sure that the manual is accessible to personnel at all times.
➔ Pass the manual on to each subsequent owner or user of the machine/plant.

1.2 Validity

This manual is exclusively valid for the machine / plant specified on the title page and in the technical data.

1.3 Defining target groups

Target group	Defining	Task
Owner	The owner (business person/company) is defined as being the party operating the machine/plant and using it in conformity with its intended purpose or ordering suitable and instructed persons to operate it on their behalf.	➔ This manual must be accessible to personnel at all times. ➔ The operator must ensure that personnel read and understand this manual and observe the instructions it contains. If necessary, the operator must carry out appropriate training courses.
Operators	Operators are defined as the persons instructed to operate the machine/plant by its owner.	➔ Read, observe and comply with the manual, especially the safety instructions and warnings.
Technical personnel	Technical personnel comprise anyone to whom special tasks, such as servicing and troubleshooting, have been entrusted by the owner and who has been trained by us.	
Electricians	An electrician is defined as being anyone who, on the basis of their professional qualifications, has experience of electrical plant, is familiar with the relevant standards in force and can not only assess and carry out the assigned tasks, but also recognize and avert potential hazards.	
Duly instructed persons	Persons instructed and trained in the tasks they have been assigned and the possible dangers and risks that could arise from incorrect behaviour. Persons who have been informed regarding the necessary safety devices, protective measures, corresponding regulations, accident prevention regulations and operating conditions.	

1.4 Symbols

Warning signs are used in this manual for your safety and to avoid injury. The warning signs are divided into the following danger levels:

DANGER

Non-compliance will result in death or serious injury!

WARNING

Non-compliance can lead to death or serious injury!

CAUTION

Non-compliance can lead to medium or minor injuries!

ATTENTION

Non-compliance can lead to property damage!

NOTICE

Information for better understanding or optimization of work processes.

2 Field of application and technical data

2.1 Field of application

2.1.1 Intended use

The filter is intended exclusively for cleaning of dirty gases containing dust and / or contaminated gases.

The machine / plant is not intended for use with explosive dust.

The filter is intended exclusively for cleaning dirty gases, may containing explosive dusts.*

The machine / plant is designed with explosion relief devices to protect against explosions.*

The machine / plant may only be installed in areas without potentially explosive atmospheres.*

The machine / plant can be installed in a Zone 22. Explosive atmospheres may occur not or rarely in these areas.**

* Applies to the ATEX version without the outer zone.
** Applies to the ATEX version for the outer zone.

NOTICE

Any other or additional use is deemed to be improper.

Conforming use also includes the following points:

- ➔ Observing and compliance with this manual.
- ➔ Observing and compliance of the assembly and/or operating manuals from the sup-suppliers.
- ➔ Compliance with the operating data (→ section **“Technical data”**).
- ➔ No modification of the machine/plant without the prior written consent of the manufacturer.

Liability for damage and losses resulting from non-conforming use of the plant rests exclusively with the owner/operator of the plant.

In addition, non-compliance with the plant's conforming use will result in the following consequences:

- Warranty will cease to be valid.
- The declarations will cease to be valid.

2.2 Rating plates

The rating plate contains the following information:

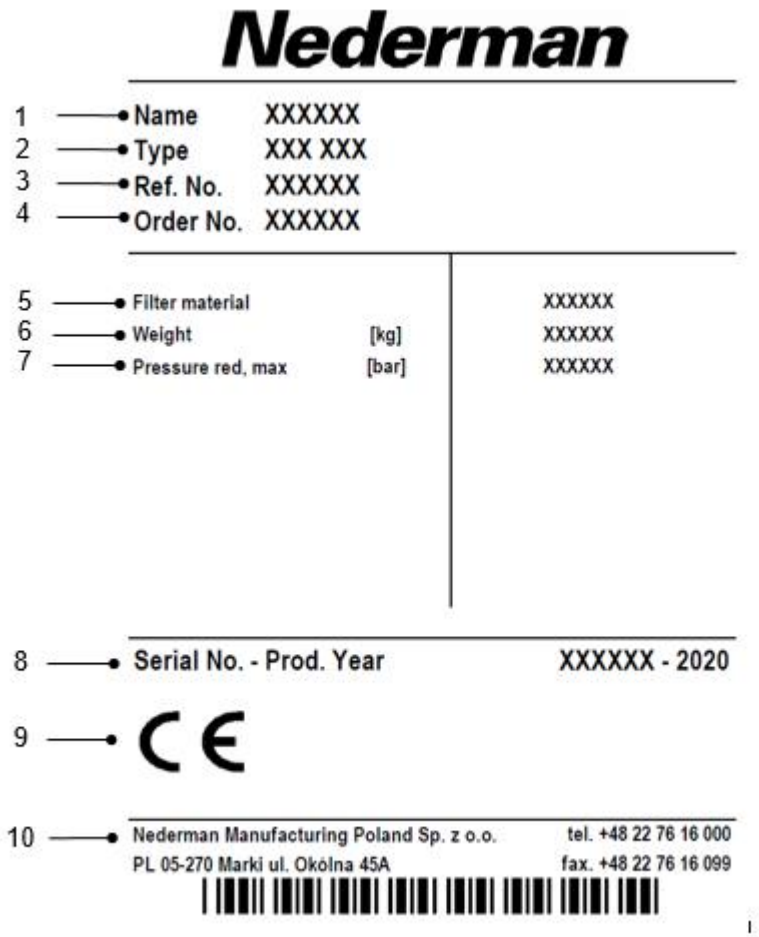

1 Name
2 Type
3 Ref. No.
4 Order No.
5 Filter material
6 Weight
7 Working pressure
8 Serial No. / Year of construction
9 CE marking
(only in the case of complete machines / plants or in the case of ATEX version)
10 Manufacturer

2.2.1 Technical data of the filter

Filter type	Filter area (m²)	Filter cartridge / element	Bin size (filter)
FlexFilter-13-C-L	32 *	8 UniClean type 40	50 or 100
FlexFilter-13-C-A	53 *	8 UniClean type 66	50 or 100
FlexFilter-18-C-L	64 *	16 UniClean type 40	50 or 100
FlexFilter-18-C-A	106 *	16 UniClean type 66	50 or 100
FlexFilter-13-K-L-4	15	2 cassettes – 4 rows	50 or 100
FlexFilter-13-K-L-6	22	2 cassettes – 6 rows	50 or 100
FlexFilter-18-K-L-4	30	4 cassettes – 4 rows	50 or 100
FlexFilter-18-K-L-6	44	4 cassettes – 6 rows	50 or 100

*UniClean cartridge type CA175: Filter area 10empera. 2,2 x the table area

Permanent filters parameters

NOTICE

Pressure loss during normal operation should not exceed 1,800 Pa.

Maximum overload pressure [Pa]	0
Maximum negative pressure [Pa]	-40 000
Operating temperature limitations	
Maximum operating temperature [°C]	+70
Minimal operating temperature [°C]	+5
Maximum ambient temperature [°C]	+40
Minimal ambient temperature [°C]	-20

2.2.2 Technical data of the filter controller

Application	Specifications	Terminals
Supply voltage	Standard version: 230 V AC +/-10% 110 V ... 120 V AC +/-10% Special version: 24 V DC	1, 3 2, 3
Control voltage	11empera. 24 V DC	17 – 31
Signal inputs	24 V DC; potential free operation	10 – 13
Signal outputs	Relay-outputs max. 2 A, 250 V AC or 1 A, 30 V DC	5 – 9, 14, 15
Signal outputs for valves	1 ... 16, 24 V / DC, expansible to 120 outputs, Output power in pulse mode 42 Watt	16, 18, 20 – 30
Outputs for extension units	Supply voltage and pulse wire connection to the extension units	32 – 35
Signal outputs 4-20 mA	**3 ... 20 mA; 0 ... 5000 Pa; internal resistance 500 Ohm,** no earth connection to the 4-20 mA signal	36, 37
Δp-range	max 0 ... 5000 Pa	
Measuring sensor	Piezoelectrically secured against positive pressure until 120 kPa	
Fuse	0,4 A / T, 5 x 20 mm, 250 V	
Temperature range	-20°C till +60°C	
Protection	Housing IP 66	
Dimensions	B x H x T: 250 x 160 x 90 mm	
Altitude of site	max. 3000 m a.s.l.	
Weight	11empera. 0,8 kg	
Type of ignition protection*	Ex II 3D Ex tc IIIC T85°C Dc	

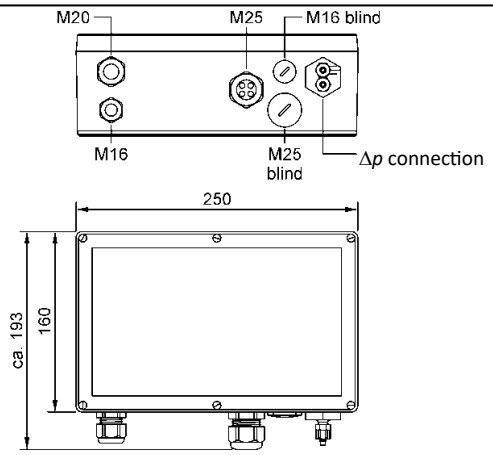

* Applies to the Atex version filter

2.3 Electric connection conditions

NOTICE

Electrical connections must be checked prior to commissioning the machine/plant for the first time and tightened if necessary!

Voltage variances in excess of plus/minus 10 % are not permitted.

Installation of supply connections may only be carried out by appropriately trained qualified personnel who have knowledge of the requirements of local power supply companies and who also apply that knowledge.

Regulations of current valid national directives are to be observed for the connection of the plant/machine.

2.4 Operating pressure and compressed air quality

ATTENTION

If the operator's compressed air supply indicates a pressure of more than 6 bar, steps must be taken to ensure that the maximum permitted operating pressure of 6 bar is not exceeded.

NOTICE

An operating pressure of at least 5 bar (max. 6 bar) in the pressure vessel is required.

At ambient temperatures below 0 °C, the service unit must be insulated to be frost-proof.

The quality of the compressed air used must comply with the specification of ISO 8573-1.

The filter shall be supplied with compressed air with the content of oil, moisture and solids given in the following table according to ISO 8573-1: *Compressed air- Part 1: Contaminants and purity classes.*

Compressed air purity classes according to ISO 8573-1

Compressed air purity	Class
for particles	2
for moisture and liquid water with temp. T* > +3°C	4
for moisture and liquid water with temp. -20°C < T* < +3°C	3
for moisture and liquid water with temp. -40°C < T* < -20°C	2
for oil	1

* T - 12emperaturę range

The pressure dew point should be below -20 ° C for filters installed outdoors. In the case of filters installed in heated rooms, compressed air moisture corresponding to a pressure dew point of + 3 ° C is allowed.

The optimal way to connect the dust collector pressure tank to the local network is to use a pressure reducing valve with a combined solids, oil and water separator. A safety valve must be installed when the supply pressure exceeds 7 bar.

3 Fundamental safety instructions

3.1 Product safety

The machine / plant is manufactured according to the safety specifications of the EU, which are current at the time of delivery. At locations outside Germany, the corresponding regulations in the respective country must be observed!

Nevertheless, danger to life or limb of the operator or third parties and / or damage to the machine/plant and other property may occur as a result of using the machine / plant.

- ➔ Only use the machine / plant in a technically perfect condition and in accordance with regulations, in a safety- and risk-conscious manner under observation of the instructions.
- ➔ Any faults that may restrict safety must be rectified immediately.

Any alterations or modifications to the machine / plant are forbidden unless explicitly approved by the manufacturer in writing. This also applies for the installation and adjustment of safety devices as well as welding on load-bearing parts. Non-compliance results in warranty invalidation.

ATTENTION

Supply voltage must be switched off before exchanging the filter control or any connected components. Failure to do so can lead to equipment damage.

3.2 Tasks of the operator

3.2.1 Staff selection and qualifications

Qualified personnel may only undertake work on the machine / plant.

The owner may only authorised persons with the independent operation or maintenance of the machine / system who meet the following requirements:

- ➔ Persons who have reached the age of 18.
- ➔ Persons who are physically and mentally suitable.
- ➔ Persons who can be expected to discharge their assigned tasks reliably.
- ➔ Persons who have been instructed with regard to operation and maintenance of the machine / plant and have proved their aptitude to the owner.

In addition to providing theoretical knowledge, instruction also includes the opportunity to acquire sufficient practical experience, as well as to acquire the ability to recognize defects jeopardizing safety at work.

The tasks assigned to operators and technical personnel must be clearly defined by the owner.

The following points must be observed in order to avoid accidents involving personal injury and / or property damage:

- ➔ Reliable members of staff may only carry out work on/with the machine / plant.
- ➔ Only deploy trained or instructed personnel. Clearly define the areas of responsibility of the operating, maintenance and repair staff.
- ➔ Staff who are undergoing training and instruction or general vocational training may only be permitted to work on the machine / plant under the constant supervision of an experienced member of staff.

- ➔ Work on the electrical equipment of the machine/plant may only be carried out by a qualified electrician or by trained staff under the charge and supervision of a qualified electrician in accordance with electrical engineering regulations. Qualified personnel must be aware of the requirements of the local power supply companies and must put this knowledge into practice.
- ➔ Only staff with special knowledge and experience with pneumatics may work on pneumatic facilities.

3.3 Safety measures by personnel

3.3.1 Safety-conscious work behaviour

WARNING

Non-compliance can lead to death or serious injury!

Anyone under the influence of drugs, alcohol or medications affecting reactive capabilities may not assemble, start-up, operate, maintain, repair or dismantle the machine / plant.

- ➔ Personal protective equipment is to be worn if necessary or stipulated by regulations.
- ➔ The safety and warning instructions listed in this manual and the warning signs mounted on the machine / plant are to be observed.

3.3.2 Operator's tasks

- ➔ Only operate the machine / plant if all safety/protective devices are in place and functioning.
- ➔ Before starting the machine/plant, make sure that the machine starting up will endanger no one.
- ➔ An inspection tour is to be carried out at least once a week whilst the machine / plant is in operation. This inspection tour shall include a general examination of the complete system:
  - Check machine / plant externally for visible damage and defects and reported them to the responsible department / person.
  - If necessary, shut down the machine / plant immediately.
- ➔ In the event of any functional faults, shut down the machine / plant immediately, switch off and lock respective main switch. Report faults to the responsible department / person and have they rectified.

3.4 Risks

All of our machines/plants conform to the latest industry standards and are safe to operate when used as intended.

In order to prevent workplace accidents and damage, potential hazards have been removed as far as possible in the design of the machine/plant.

Protection against remaining danger areas has been provided by:

- Mechanical safety devices
- Warning devices such as warning signs

Nevertheless, danger to life or limb of the operator or third parties and/or damage to the machine/plant and other property may occur as a result of using the machine/plant.

- Danger from moving parts
- Danger from faults in controls through unexpected movements deviating from normal work procedures

3.5 Technical components of the safety system

3.5.1 Protective facilities

WARNING

Operation of the machine / plant without safety devices can lead to death or serious injury!

➔ Check safety devices for fully functional.

Danger points and areas, which have to be in view or directly accessible to operating or qualified personnel for inspection and/or maintenance work, are safeguarded by:

- Mechanical safety devices
- Warning devices such as warning signs

3.5.2 Danger, warning and information ("Note") signs

Warning signs attached to the machine/plant are intended to attract the attention of personnel to danger points on the machine/plant.

➔ Observe all instructions on the warning signs.
➔ Replace any missing or damaged warning signs immediately.

3.6 Fire protection

NOTICE

Operators must observe the relevant laws and regulations in each country!

The operator must ensure that burning / glowing parts **cannot** enter the machine / plant with the personnel appointed to undertake maintenance / inspection work!

This note relates only to safety aspects (conduct of the personnel during maintenance / inspection work on the machine / plant) and not to the plant's production technical design.

The operator must inform external contractors accordingly. They are obliged to obtain information on the possible hazards from the member of staff responsible for the area concerned.

3.6.1 Action in the event of fire

DANGER

Danger of poisoning from pollutants!

➔ Wear personal protection equipment, clothing and breathing mask.

WARNING

Danger of burns from intense heat!

➔ Keep the doors and the inspection openings of the machine / plant closed in the event of a fire.

If a fire is suspected or actually breaks out:

➔ Press button **"EMERGENCY STOP"**

Ensure the machine / plant has shut down automatically, i.e. the built-in radial fan and the filter cleaning system is switched off.

➔ Close all existing manually operated dampers in the piping system.
➔ Prevent fresh air supply.
➔ Switch off electrical consumers.

➔ Call the fire department.
➔ Cooling of the machine / plant from the outside by the fire department.

3.6.1.1 Residual material

DANGER

Danger of poisoning from pollutants!

Residual material contains pollutants from the dirty gas.

➔ Personal protective equipment must be worn in the case of direct contact with residual material.

4 Explosion protection

DANGER

Explosive atmosphere! Non-compliance leads to death or serious injuries!

The following activities are strictly forbidden whilst the machine / plant is in operation:

➔ Accessing / Mounting the machine / plant.
➔ Working on the compressed air system.

DANGER

Explosive atmosphere! Non-compliance leads to death or serious injuries!

Constructional measures that prevent the free discharge of explosions by the explosion relief elements are not permitted, e.g.

➔ enclosing the machine / plant.
➔ connection of channels / ducts.
➔ covering with panels or drapes.

NOTICE

Technical explosion decoupling of the machine / plant from other connected plant sections must be ensured using suitable protection systems.

Technical explosion protection consists of three principle possibilities.

- Primary explosion protection:

  Prevention or restriction of the occurrence of hazardous potentially explosive atmospheres by reducing or replacing combustible substances, ventilation systems, inertization.

- Secondary explosion protection:

  Prevention of the ignition of hazardous potential explosive atmospheres by ensuring there are no ignition sources.

- Constructive explosion protection:

  Restriction of explosion sources to a harmless level by the implementation of measures such as explosion relief, explosion suppression or explosion-resistant design.

Although the machine / plant does not actually have any own ignition sources, it is not possible to rule out integration of an ignition source into the machine / plant by third parties and consequently, the machine/plant is protected by constructive explosion protection.

4.1 ATEX designation

With regard to the requirements of Directive 2014/34 / EC and ISO EN 80079-36 product is marked as follows:

Filtr

CE Ex **II 1D(3D)/- c Ex h IIIC 120°C Da(Dc)/-**

Wentylator

CE Ex **II 3D/- c Ex h IIIB 120°C Dc/-**

CE - European mark of conformity (French: **C**onformité **E**uropéenne).

Ex - marking of protective system intended for use in potentially explosive atmospheres, according to the provisions of Directive **2014/34/UE.**

II - equipment group.

1D(3D)/- - marking of the filter protection system intended for use in potentially explosive atmospheres due to the presence of dust.

Optional filter can be adapted to work with the atmosphere outside, he will have a mark:

1D(3D)/3D

3D/- - designation of the protective system of the fan intended for use in potentially explosive atmospheres due to dust presence.

Optional fan can be adapted to work with the atmosphere outside, he will have a mark:

3D/3D

c - type of ignition protection.

Ex h - marking of compliance with the level of protection of the equipment.

IIIC - dust group for the filter.

IIIB - dust group for the fan.

°C - maximum surface temperature.

Da(Dc)/- – internal / external protection level of the filter.

optionally, the filter can be adapted to work with the outside atmosphere, it will be marked:

Da(Dc)/Dc

Dc/- – internal / external protection level of the fan

optionally, the fan can be adapted to work with the atmosphere outside, it will be marked with:

Da/Dc

4.1.1. Area classification in the filter

The MCP / MEP Ex dust collector is part of the entire dust extraction system. The interior of the dust collector is classified according to Directive 2014/34 / EU as:

- **zone 20** in the dirty air chamber,
- **zone 22** in the clean air chamber.

4.2 Establishment and marking of the safety zone

DANGER

Explosive atmosphere! Non-compliance leads to death or serious injuries!

A safety zone must be set up and marked in the area of the blow direction of the explosion relief elements (only in cases of horizontal or angled arrangement).

Please see the following sketch for size of safety zone to be set up.

The safety zone has to be marked individually for each explosion relief panel. As an alternative, one safety zone could be marked which covers all explosion relief panel which are mounted on the filter.

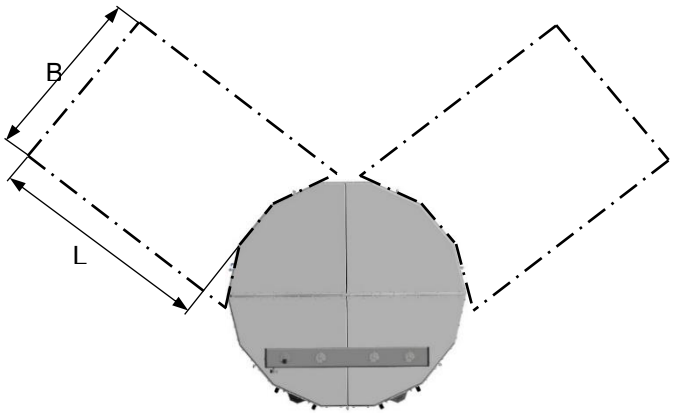

NOTICE

The location of the explosion relief panels in the drawing are to be regarded as an example. The location and number of explosion relief panels on the supplied filter can differ from this.

Width of the safety zone (B) at least [m]	Length of the safety zone (L) at least [m]
5	17

The safety area must be clearly marked, for example with fencing, warning tapes and signs, and must be inaccessible when the machine / device is in operation. The area must be free from flammable and explosive substances or other elements that can be damaged by flames and explosion pressure.

4.3 Establishment and marking of the safety zone – flameless pressure relief devices

DANGER

Explosive atmosphere! Non-compliance leads to death or serious injuries!

A safety zone must be set up and marked in the area of the blow direction of the explosion relief elements (only in cases of horizontal or angled arrangement).

Please see the attached operating instructions from the manufacturer of the flameless pressure relief element for information on the size of the safety zone to be installed.

The safety zone must be marked in a clearly visible manner.

4.4 Conduct in the safety zone

DANGER

Explosive atmosphere! Non-compliance leads to death or serious injuries!

The following is **not** permitted in the safety zone:

➔ Persons loitering in the safety zone whilst the machine / plant is in operation
➔ Setting up storage areas
➔ Storage of fuel or lubricants
➔ Storage of other flammable substances
➔ Installing other process equipment which could lead to further explosions / fires

These rules of conduct must be observed without fail by all employees.

4.5 Equipment

NOTICE

The protective measures applied exclusively relate to the machine/plant supplied by us.

The plant is equipped with special components:

- Flameless explosion relief installed on the filter
- Rotary valve, Type: NRSZ3

4.6 Preventive measures

The following precautions must be taken:

➔ Regular cleaning to remove dust deposits from the surface of all machine / plant parts.

The surface of the machine / plant parts must be visible. Cleaning intervals must be specified by the owner.

➔ Regular inspection of the flameless explosion relief (→ section **"Supplier documentation"**).
➔ Regular inspection of door seals.
➔ Regular inspection of earthing straps.
➔ Regular inspection of the safety zone.
➔ Regular cleaning of the safety zone.

4.7 Measures following an explosion

The following measures must be applied following an explosion:

➔ All machine/plant parts must be examined for signs of damage and any deformed parts replaced.

4.8 Use of tools in areas with potentially explosive atmosphere

NOTICE

The owner must ensure that the personnel entrusted with maintenance/inspection work is informed with regard to the safe use of tools in areas with potentially explosive atmosphere!

The use of tools in zones 21 and 22 should form the subject of a system of "work permits/licences".

Grinding and cutting work in or near zones, 21 and 22 can produce sparks capable of flying over large distances and leading to the formation of smoulder spots. For this reason, the remaining area around the work area should also be included in the required safety measures.

A distinction is made between two types of tools:

a) Tools, which can produce a single spark when used (e.g. screwdrivers, wrenches, impact wrenches).
b) Tools, which produce a whole series of sparks when cutting and grinding.

Tools capable of producing sparks are prohibited in zone 20.

Steel tools of the type described in paragraph a) may be used in zones 21 and 22.

Steel tools of the type described in paragraph b) may only be used if the work area is isolated from the remaining area of zones 21 and 22 and if the following steps have been implemented additionally:

- Dust deposits have been removed or
- the work area is kept sufficiently damp to prevent dust being swirled up and/or smoulder spots being produced.

5 Structure and function

5.1 Structure

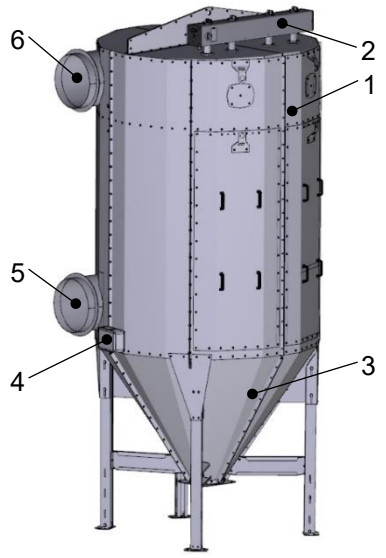

1 Filter
2 Compressed air facility
3 Dust collection hopper with support structure
4 Filter controller
5 Dirty gas connection
6 Clean gas connection

5.2 Structure – standard filter

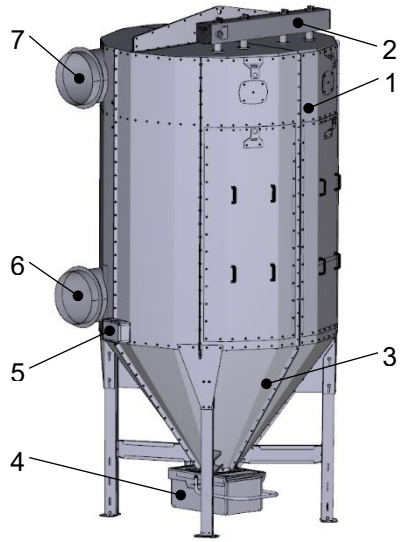

1 Filter
2 Compressed air facility
3 Dust collection hopper with support structure
4 Dust bin
5 Filter controller
6 Dirty gas connection
7 Clean gas connection

5.3 Structure – rotary valve filter

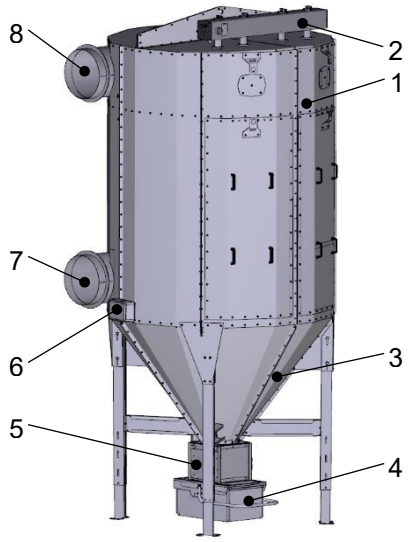

1 Filter
2 Compressed air facility
3 Dust collection hopper with support structure
4 Dust bin
5 Rotary valve
6 Filter controller
7 Dirty gas connection
8 Clean gas connection

5.4 Structure – filter with rotary valve and BIG-BAG

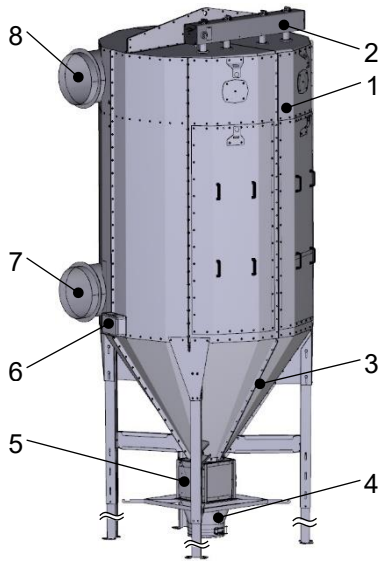

1 Filter
2 Compressed air facility
3 Dust collection hopper with support structure
4 BIG-BAG holder
5 Rotary valve
6 Filter controller
7 Dirty gas connection
8 Clean gas connection

5.5 Function

NOTICE

In order to guarantee trouble-free operation, the maintenance instructions (→ section **“Maintenance”**) are to be observed.

NOTICE

In the case of short dirty gas ducts, we recommend the installation of a shut-off damper in order to prevent dust discharge during secondary cleaning.

The dirty gases pass through the dirty gas connection piece into the dirty gas chamber of the filter. Here, the air speed is lowered, as a result of which the larger dust particles are separated.

The dirty gas streams through the filter elements to the clean gas chamber. Dust is collected on the outer surfaces of the filter elements.

Dust is cleaned of fully automatically (online effect) as dust contamination takes place. The compressed air pulse against the filter direction inflates the filter element. This results in adhering dust being cast off.

The filter cleaning system is controlled fully automatically. The pulse / pause ratio and other parameters are adjustable.

The separated dust falls into a dustbin.

The clean gas is extracted via the connection piece on the clean gas chamber.

5.6 Description of the components

5.6.1 Filter

Structure

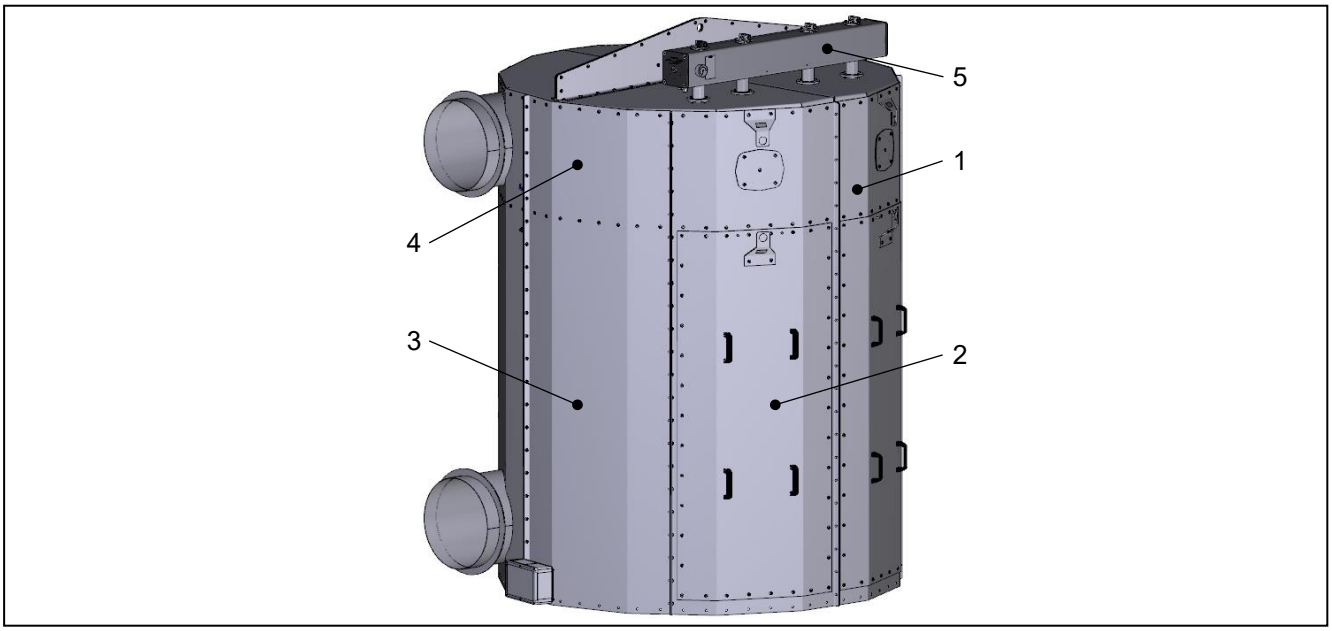

1 Housing
2 Inspection door
3 Dirty gas chamber
4 Clean gas chamber
5 Compressed air facility

Cleaning cycle

NOTICE

For the operating pressure and quality of the compressed air → section **"Operating pressure and compressed air quality"**

The filter elements are cleaned by compressed air pulses. The cleaning takes place during operation (online effect).

Filter element cleaning is activated when the pre-set differential pressure has been reached (cleaning cycle).

The cleaning cycle is repeated as often as necessary until a minimum value for differential pressure has been reached.

The cleaning cycles are dependent on the type of dust and the dust and/or pollutant content in the dirty gas.

Sequence cleaning cycle

NOTICE

Factory settings → section **"Parameter list"**

The following cycle begins when a cleaning cycle is initiated:

- Membrane valve 1 opens
- Pulse time

- Membrane valve 1 closes
- Pause (pause time 1 or pause time 2)
- Membrane valve 2 opens
- Pulse time
- Membrane valve 2 closes
- Pause (pause time 1 or pause time 2)
- …

Sequence Down-Time-Cleaning

Down-Time-Cleaning only starts when the fan is switched off, if the differential pressure has exceeded the value Δp DTC max during operation.

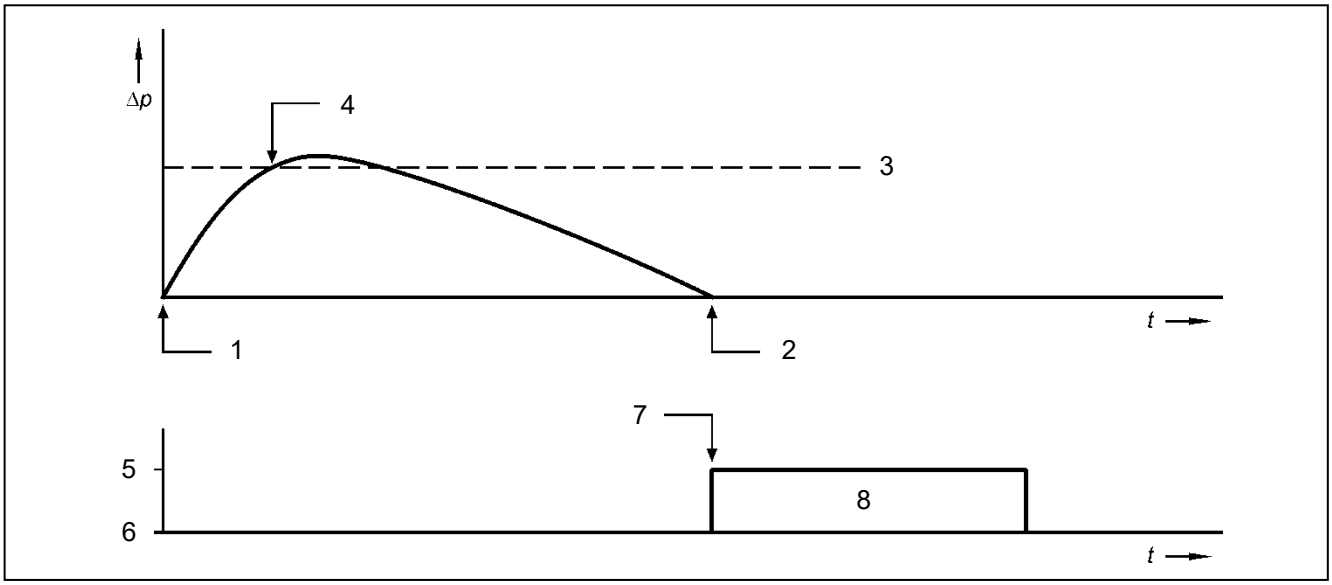

1	Fan ON	5	Down-Time-Cleaning ON
2	Fan OFF	6	Down-Time-Cleaning OFF
3	Δp DTC max	7	Δp DTC max starts down-time cleaning
4	Δp exceeds the value Δp DTC max	8	Down-Time-Cleaning (DTC)

Differential pressure measurement

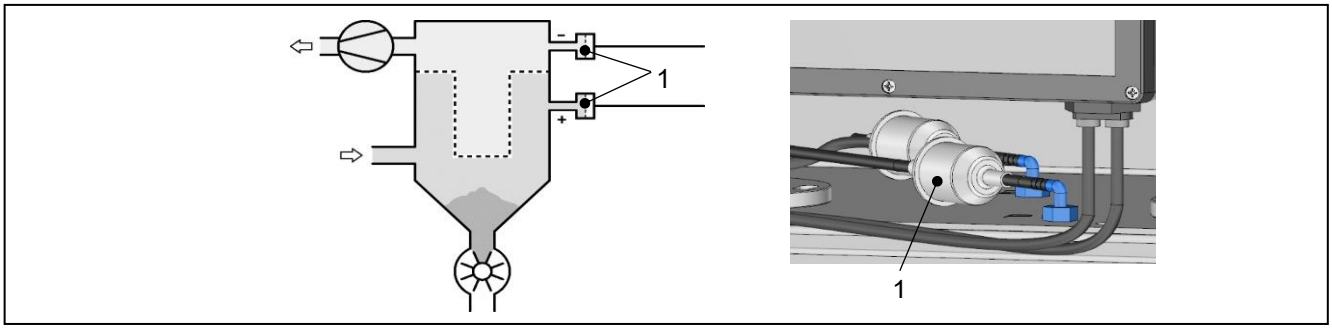

The hose connections of differential pressure measurement are fitted with air filters (1) to prevent explosive dust from getting into the filter control.

NOTICE

A pressure meter must be installed for monitoring operation if the filter is part of a system where filter operation is not directly apparent. This applies in particular to systems where a filter failure could result in dangerous situations.

5.6.2 Single flap valve

Structure

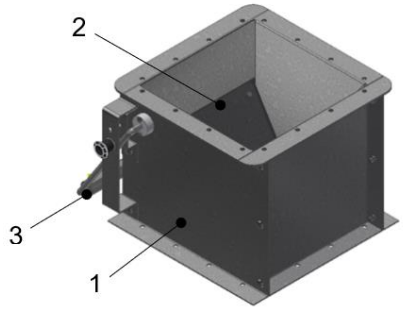

1 Housing
2 Flap
3 Lever arm with counterweight

Function

The single flap valve is used to allow the bin to be emptied while minimizing dust emissions around the filter collector during bin emptying.

NOTICE

Bin emptying shall only be performed when the filter is stopped, the pressure inside the filter has equalized with ambient pressure, and no cleaning cycle is active.

NOTICE

The single flap valve shall not be used as an ATEX safety valve while the filter is in operation.

Bin Emptying Procedure

1 Stop the filter.
2 Lock the lever arm in place with a pin to keep the flap closed.
3 Remove and empty the dust container.
4 Reinstall the dust container and secure it with the handle.
5 Lock the lever arm in the open position with a pin.
6 Start the filter.

NOTICE

If the flap was not opened and secured with a pin before the filter was started, stop the filter before opening the flap. Do not open the flap while the filter is in operation.

6 Operation Site

6.1 Location and foundation requirements

NOTICE

Easy handling of separated dust and alleviation of service and maintenance work should be taken into account when positioning the filter.

The location must be free of objects such as power cables etc.

The anchoring bolts (M16) must protrude out of the foundation by at least 60 mm.

The foundation must be prepared accordingly if the filter unit is to be secured with the help of expansion bolts.

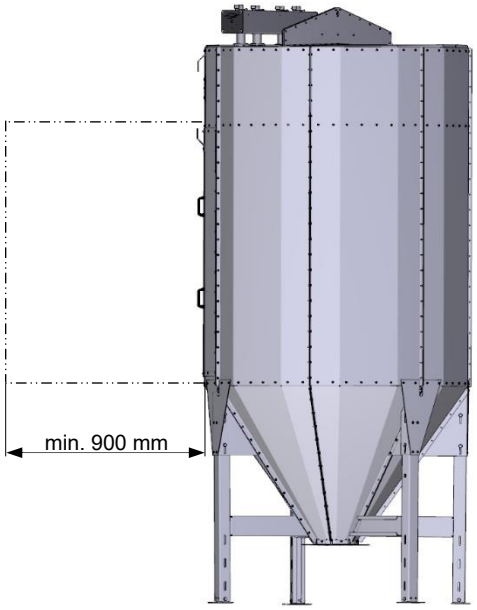

The filter is usually positioned on a reinforced concrete foundation. It is possible, however, to place the filter on a different type of foundation. The following factors must be taken into consideration for the calculation of the foundation or supporting structure:

- Maximum weight of the filter (→ rating plate)
- Maximum weight of the separated dust

6.2 Permissible ambient conditions

The control cabinet is designed for an ambient temperature of -20 °C to +40 °C.

The geared motors and three-phase motors are designed for an ambient temperature range of -20 °C to +40 °C and installation heights of up to 1000 m above sea level.

Intake air for cooling gear motors and three-phase motors must not exceed +40 °C and may not be contaminated with potentially explosive gases or dusts.*

Intake air for cooling gear motors and three-phase motors must not exceed +40 °C.**

* Applies to standard version filters
** Applies to filters in the Atex version

7 Transport and delivery

NOTICE

The transport of the components may take place only in areas, where no explosive atmosphere is present.

7.1 Transport

7.1.1 Component supply

NOTICE

The assembly instructions must be observed when assembling components.

The individual components are supplied pre-assembled on pallets.

The components are secured on pallets by straps and bolts.

7.1.2 Transport by pallet truck or fork-lift truck

DANGER

Falling machinery parts lead to death or fatal injuries!

- ➔ Cordon off danger area with suitable marking and barrier elements.
- ➔ Appoint supervisor to monitor the danger areas during transport.
- ➔ **Only** use approved load hoisting means with adequate load-bearing capacity.
- ➔ Secure machine parts.
- ➔ Drive slowly and safely.

NOTICE

The choice of load hoisting means and the operation of the load hoisting equipment may **only** be carried out by appropriately instructed and appointed persons.

7.1.3 Transport by crane

DANGER

Falling machinery parts lead to death or fatal injuries!

- ➔ Cordon off danger area with suitable marking and barrier elements.
- ➔ Place “Standing under suspended loads forbidden” sign in a clearly visible position.
- ➔ Appoint supervisor to monitor the danger areas during transport.
- ➔ **Only** use approved load hoisting and handling equipment with adequate load-bearing capacity.
- ➔ Handling equipment may **only** be connected to designated hoisting points on machine parts when lifting.
- ➔ Pipeline parts may **only** be lifted using the designated hoisting points or a non-slip plastic rope.
- ➔ **Do not stand or walk** under suspended loads.

NOTICE

The choice of load hoisting means and the operation of the load hoisting equipment may **only** be carried out by appropriately instructed and appointed persons.

7.2 Packaging

NOTICE

Correct packaging must be ensured in the event of any further transportation carried out by the customer.

The individual parts of the machine/plant are correctly packed for transportation to the shipping point or point of installation.

The type of packaging depends on the transportation route and transport means.

Disposal of packaging material

➔ Dispose of packaging material in accordance with local regulations.

➔ Comply with any symbols on the packaging.

7.3 Checking supplied components

Upon receipt of delivery, check that all parts are present and that no parts have been damaged.

Please contact us immediately if any parts are missing or have been damaged in transit.

8 Storage and Conservation

NOTICE

The storage of the components may take place only in areas, where no explosive atmosphere is present.

NOTICE

The manufacturer / supplier accepts no liability for damages and subsequent damage arising from improper or incorrect storage.

In addition, the specific regulations of the respective sup-suppliers must be observed for the storage and conservation.

8.1 Storage of components

If individual components are being stored at a different location prior to final assembly and installation of the machine / plant, they must be stored in a dry location protected against adverse weather conditions.

Furthermore, the components must be protected against aggressive atmospheres and other damaging influences of any type whatsoever.

The condition of the anti-corrosion layer must be checked regularly and any damage repaired (→ section **"Maintenance and inspection of the conserved machine / plant"**).

8.2 Conservation of the machine/plant

The following measures must be observed and complied with if the machine/plant is going to be shut down for a certain period of time (1 month or more):

➔ The machine / plant must be run until completely empty, i.e. test operation (→ section **"Test Operation"**) must be activated prior to shutting down the machine/plant in order to avoid dust deposits.
➔ The dust bin must be emptied.

8.2.1 Maintenance and inspection of the conserved machine / plant

Interval Control point / Action

Every 2 weeks

- Filter
  ➔ Start test operation (→ section **"Test Operation"**) and run Down-Time-Cleaning operation.
- Motor-operated components
  ➔ Run for approx. 5 minutes.

Every 2 month

- Anticorrosion layer
  ➔ Check for corrosion

8.2.2 Measures prior to commissioning after shutdown

No further measures are required if the prescribed checklist has been observed and the machine/plant can be put back into operation in automatic mode.

9 Assembly

NOTICE

The individual parts may only be slung at the lugs provided for this purpose!

NOTICE

The assembly of the components may take place only in areas, where no explosive atmosphere is present.

NOTICE

Observe the corresponding legal regulations for avoiding accidents in the respective country!

The machine / plant is supplied in assemblies and / or individual parts.

We recommend the machine/plant is assembled by our personnel or under the supervision of an assembly manager from us.

9.1 Tightening the screws

Tighten the thread rolling screws securely with the selected tool.

It is not necessary to apply a specific torque when tightening down the thread rolling screws.

NOTICE

Avoid repeated loosening and tightening of thread rolling screws, otherwise a fast and tight seal of the connection can no longer be guaranteed.

9.2 Earthing of the components

NOTICE

All components of the machine / plant, including adjacent components, must be conductively connected to each other.

Insulated plant sections must be provided with earthing connections and connected to each other with conductive connections.

9.3 Tools

Battery-powered or pneumatic impact screwdrivers are to be used.

9.4 Filter

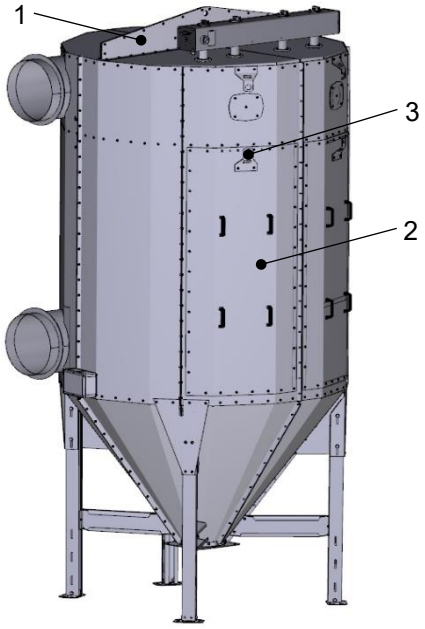

➔ Carefully lift the filter with the aid of a crane attached to the suspension lug (1) provided for this purpose.

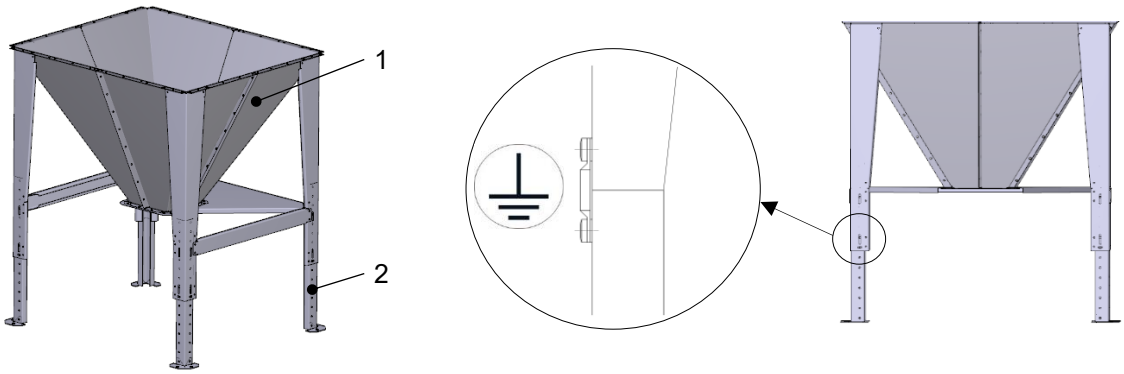

➔ Raise the filter together with the dust collection hopper (1)
➔ Push the support extensions (2) into the supports of the dust collection hopper (1) and fix them with screws and nuts according to the required height.

NOTICE*

Earthing of the filter and dust collection hopper has been prepared so that only the earth cable need be connected to the corresponding points.

* For ATEX version filters

➔ Place the filter together with the dust collection hopper on the prepared foundation base or the intended steel construction.
➔ Drill the fastening holes for the supports in the support base plates.
➔ Fasten the dust collection hopper's support base plates to the foundation using dowels or anchor screws or to the steel construction using bolts.

9.4.1 Filter controller

The filter controller is provided with a mounting plate and fastened onto the pressure tank with a cable tie.

9.4.1.1 Mounting the filter controller on the pressure tank

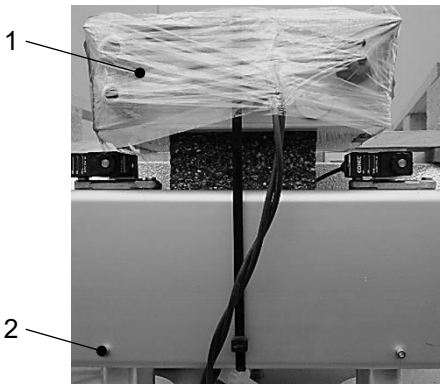

- ➔ Remove the fastening screws (2) on the pressure tank.
- ➔ Remove the plastic foil.
- ➔ Remove cable tie.
- ➔ Screw the filter controller (1) on to the front side of the pressure tank with the help of the connected mounting plate and the two fastening screws (2).

NOTICE

The mounting plate can be bent slightly forward in order to achieve better readability / visibility of the display.

9.4.2 Filter controller

The filter controller is provided with a mounting plate and fastened onto the pressure tank with a cable tie.

9.4.2.1 Mounting the filter controller

- ➔ Remove cable tie.
- ➔ Screw the filter controller onto the provided points with two screws using the connected mounting plate.

9.4.3 Filter controller

NOTICE

The filter controller is provided by the customer.

9.4.4 Differential pressure measurement hose connectors

NOTICE

The hoses for the differential pressure control between the filter control and the filter are usually pre-mounted at the works.

If this is not the case, fasten the hoses to the filter control in accordance with the following assembly instructions.

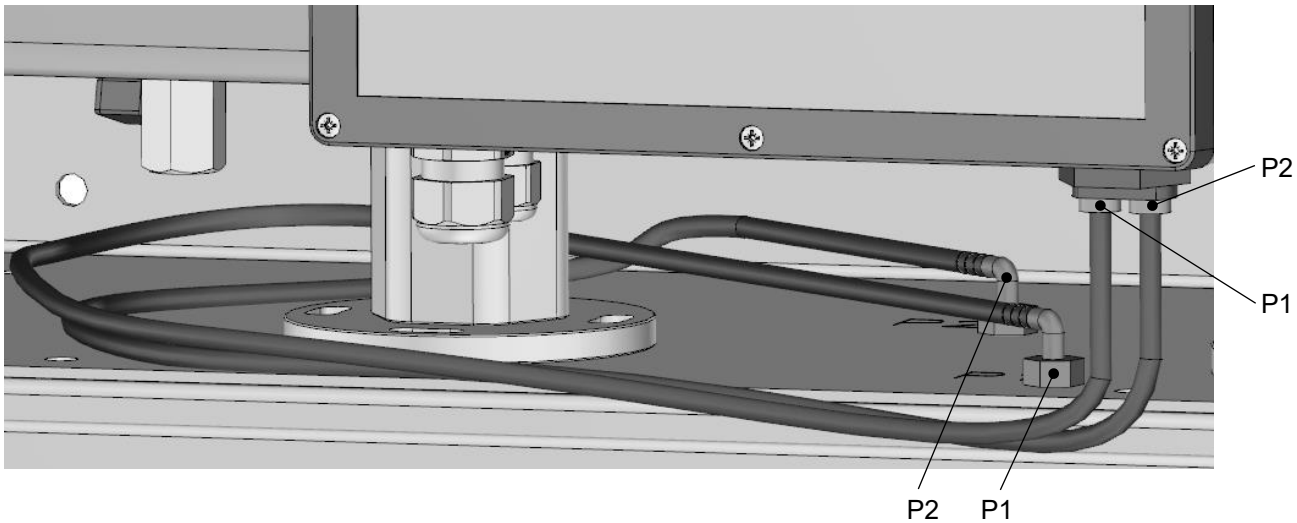

➔ Connect the hoses for the differential pressure measurement with the particular connection pieces on the filter controller (P1 or P2).

9.4.5 Dust container

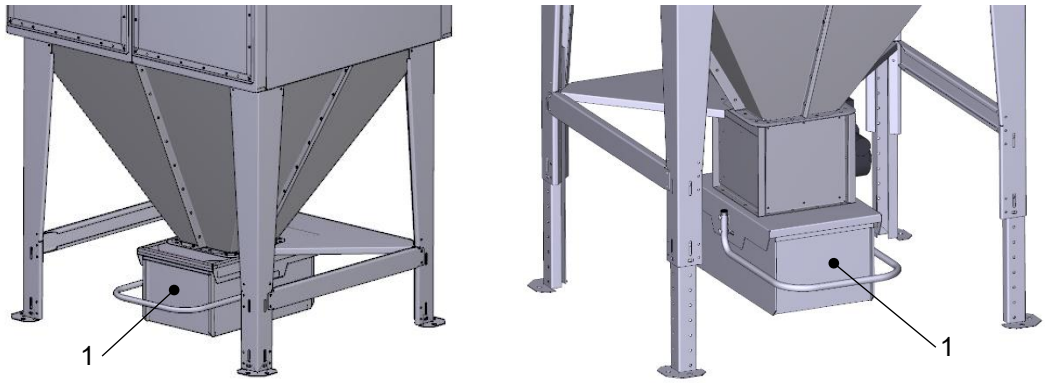

➔ Push the clamping lever on the dust collector hopper upwards.
➔ Push the dust bin in the rails underneath the dust collection hopper as far as it will go to the rear.
➔ Push the clamping lever down.

9.4.6 Compressed air connection

NOTICE

The compressed air connection must be provided with a water / oil separator and a pressure reduction valve. All parts between the compressor and the pressure vessel must have a minimum diameter of ½“.

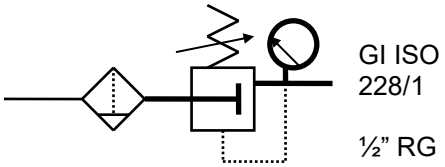

➔ Connect the compressed air supply to the pressure vessel without pressure.

9.4.7 Power supply connection

DANGER

Electric shocks can lead to serious injuries!

➔ Only qualified electricians may work on electrical equipment.

9.4.7.1 Filter controller

WARNING

Incorrect installation of the filter control or the connected equipment can lead to death, serious injury and / or equipment failure.

For this reason, the general safety regulations for equipment in industrial electrical plants should be observed and in particular the following points:

➔ Technical personnel may only carry out installation of the filter control.
➔ All applicable legislation, requirements, rules and regulations for the installation of electrical operating equipment must be observed with regard to the installation site.
➔ Technical personnel may only carry out adjustments to equipment of protection type IP00 without covers. The equipment must be switched off. Local safety and accident prevention regulations must be observed.
➔ The filter control may only be used within the permitted operating range.

NOTICE

The terminal diagram must be observed when connecting the filter controller (→ section **“Terminal diagram of the filter controller”**).

Upon completion of connection work, make sure that the housing cover is correctly in place and screwed tight.

NOTICE

Use a screwdriver with a blade width of max. 3 mm to open the spring-loaded terminal.

Using a larger screwdriver can lead to damage to the terminal.

➔ Establish power supply.
➔ Connect fan to filter controller (terminals 10 and 11).

NOTICE

Make sure that the cable glands are screwed tight and completely surround the cables.

➔ Unscrew and remove cable glands which are not in use and replace with a blanking plug.*
➔ Do not remove cable glands that are not in use; close them with special ATEX-approved sealing plugs.**

* Applies to standard version filters
** Applies to filters in the Atex version

9.4.8 Burst sensor - applies to filters in the Atex version

NOTICE

The burst sensor of the explosion vent must be mounted (→ instructions of the sub-supplier / → section 12) and electrically connected after completing the assembly work.

➔ Mount burst sensor and connect to electrical supply.
➔ Remove the protective cap on the burst sensor.

9.5 Earthing of the machine/plant

NOTICE

Electrically conductive connection of the machine / plant to earthing potential must be established.

The earthing of the machine / plant must be carried out by a specialist company

Upon completion of assembly work, the complete machine/plant must be earthed to the foundation or the steel construction.

The earthing must be carried out in accordance with the currently valid national guidelines for the discharge of static electricity.

10 Initial commissioning

10.1 Preparatory activities

WARNING

Moving machine parts can lead to death or serious injuries!

The first three control points may only be carried out when the machine / plant is at a standstill:

- ➔ Disconnect machine / plant from electrical power supply, i.e. disconnect all energy sources using the main switch on the control cabinet (main switch to position **"0"**).
- ➔ Attach a warning sign to main switch that prohibits any operation.
- ➔ Secure main switch with a padlock and remove key.
- ➔ Check that the machine / plant is voltage-free.
- ➔ Depressurize compressed air supply and vent (empty) pressure vessel.

NOTICE

Any errors found must be remedied before proceeding with the commissioning.

For the operating pressure and quality of the compressed air → section **"Operating pressure and compressed air quality"**.

If the power consumption is too high, switch the machine/plant off immediately and contact our service department.

- ➔ Check filter interior and duct system thoroughly for foreign bodies. Remove any foreign bodies that are found.
- ➔ Check filter and duct system for leaks.
- ➔ Move all rotating parts by hand in order to check that they are running free.
- ➔ Check all electrical connections for correct design.
- ➔ Switch electrical power supply on.
- ➔ Check clockwise rotating field of electrical power supply.
- ➔ Start compressor and / or open compressed air supply.
- ➔ Check pressure in pressure tank (pressure gauge display).
- ➔ Select language on the filter controller (-> section **"Parameter list"**).
- ➔ Start test operation (-> section **"Test Operation"**).
- ➔ Check filter cleaning.
- ➔ Check fan's power consumption.

NOTICE

Test operation ends automatically upon completion of the test program.

NOTICE

Before initial commissioning the machine / plant has to be fully mounted and integrated into the process according to its intended use.

NOTICE*

Prior to commissioning for the first time, the machine / plant has to be mounted completely, closed, sealed and integrated into the process in accordance with the requirements for intended use. Explosive atmospheres must not escape from the filter into the surrounding environment.

* Applies to filters in the Atex version

- ➔ Switch machine / plant on (→section **"Operation"**).

11 Operation

NOTICE

Before commissioning the machine/plant, it is necessary to follow the comments in section **“Fundamental safety instructions”**!

A trained expert may only execute the commissioning of the machine/plant!

NOTICE

The settings may only be changed or cancelled during the guarantee period with our prior consent.

11.1 Plant start-up

NOTICE

Before switching on the machine / plant is to ensure that, the compressed air supply is ensured and the operating pressure in the pressure vessel (→ section **“Operating pressure and compressed air quality”**) is reached.

➔ Check whether the main switch on the control cabinet has been switched on; if necessary, switch on.

➔ Unlock button **“EMERGENCY OFF”** and, if it has been actuated, reset via the button **“Emergency Stop Reset”**.

➔ Activate machine/plant ready for operation, i.e. turn selector switch **“REMOTE – 0 – LOCAL”** into the requested position.

The ready-to-operate filter cleaning system is enabled.

11.2 Plant shutdown

NOTICE

Press **“EMERGENCY OFF”** button in real emergencies.

When operation of the upstream plant components ends and prior to prolonged stoppages (e.g. for inspections), the entire plant must remain in operation for a further period of roughly 15 - 30 minutes so that the cake of dust adhering to the filter material can be removed and the dust collection hopper and all subsequent dust discharge devices can be emptied completely.

This prevents the cake of dust adhering to the filter material during operation falling off abruptly on account of the sudden pressure drop and clogging the dust discharge devices.

NOTICE

Any and all subsequent on-site plant components for transporting or storing the dust must also be in operation during this time.

➔ Then switch off the plant via the selection switch **“REMOTE – 0 – LOCAL”**.

NOTICE

Switch off the main switch during prolonged standstill periods or repair work and secure it with a padlock.

Further criteria for a shutdown of the plant in case of malfunction may be part of the following section.

11.3 Temperature monitoring

NOTICE

The safety thermostat must not be set higher than 80° C. The setting level must be checked prior to starting up.

A safety thermostat is installed in the clean gas chamber and is set to 80° C.

NOTICE

The filter must be checked for damage before switching the plant back on.

11.4 Fault indicator

The fault messages are displayed optically by indicator lights on the control cabinet.

11.5 Control and indicator elements

11.5.1 Control elements

The control elements are installed on the control cabinet door.

Control elements	Function
REMOTE – 0 – LOCAL	**REMOTE** The automatic activation process of the machine/plant is initiated by an external signal. **0** The machine/plant is switched OFF. **LOCAL** This initiates the activation procedure of the machine/plant.
EMERGENCY OFF	**Only in emergencies!** The control voltage is switched off
Emergency Stop Reset	Reset fault indicator after completion of repairs
Control elements	**Function**
AUTOMATIC – 0 – MANUAL	**AUTOMATIC** The machine / plant is controlled by the timer settings. **0** The machine / plant is switched **“OFF”**. **MANUAL** The machine / plant can be switched **“ON”** and **“OFF”** manually.
EMERGENCY OFF	**Only in emergencies!** The control voltage is switched off
Emergency Stop Reset	Reset fault indicator after completion of repairs

11.5.2 Indicator lights

The relevant messages (e.g. operating conditions of the drives, faults etc.) of the machine/plant are displayed with lights on the control cabinet door.

Messages	Meaning
Rotary valve Run	**Comes on** when the rotary valve is operating
Rotary valve Fault	**Comes on** in the event of a fault
Burst sensor	**Comes on** when the burst sensor has been triggered

11.6 Filter controller

11.6.1 Unit description

The filter control system is an electrical controller for filter plants with pressure pulse air cleaning.

After closing the fan on the filter controller (terminals 10 and 11 / → section **"Terminal diagram of the filter controller"**) and establishing voltage supply (→ section **"Assembly → Power supply connection → Filter controller"**), the filter controller operates fully automatically according to the pre-set parameters without requirement for any further actions.

NOTICE

Closing contacts 10 and 11 switches the filter controller on.

Where the periods for pulsed cleaning and the pause between two cleaning pulses are previously determined, all attached solenoid valves are activated, starting with the pause period. Any interruption of the voltage supply causes the controller to restart as soon as the power is re-established. An interruption via the Δp-mode or the terminals 12, 13 causes the control process to stop. After release of the Stop signal, the control process is resumed.

Down-time cleaning is activated after switching off the plant (opening of contacts 10 and 11), depending on the selected DTC mode (→ section **"Down-time cleaning"**). The start-stop input is inactive during down-time cleaning. The filter controller is switched to standby mode upon completion of down-time cleaning.

NOTICE

Switching on down-time cleaning is a pre-condition for all warranty services by the manufacturer.

If motor-operated dust discharge units are in place, they must also be switched on during down-time cleaning. The signal for this is obtained from terminals 8 and 9. The signal is activated as soon as:

- compressed air cleaning and / or the fan are switched on.
- down-time cleaning is activated.

All internal voltages in the controller are monitored. In the event of voltage failure, an alarm is activated via terminals 5, 6 and 7 (→ section **"Terminal diagrams"**).

The filter controllers have a differential pressure transmitter built in.

NOTICE

The differential pressure monitor is only suitable for measurements of non-aggressive, dry gases and must be protected against differential pressures that are greater than 12000 Pa.

The differential pressure is measured by the differential pressure switch and displayed. Differential pressure depending cleaning is active when Δp-MAX > 0. Two independently adjustable pressure levels will then control the cleaning procedure. In addition, an alarm limit can be incorporated in order to indicate excessively high differential pressure.

Correct setting of Δ*p*: Δ*p* MIN < Δ*p* DTCmax < Δ*p* MAX < Δ*p* Switch < Δ*p* max ALARM

NOTICE

The filter controller's power supply must be interrupted by the fire alarm system if local requirements do not allow any cleaning pulses following fire detection.

11.6.2 Terminal diagrams

11.6.2.1 Terminal diagram of the filter controller

DFC-08M

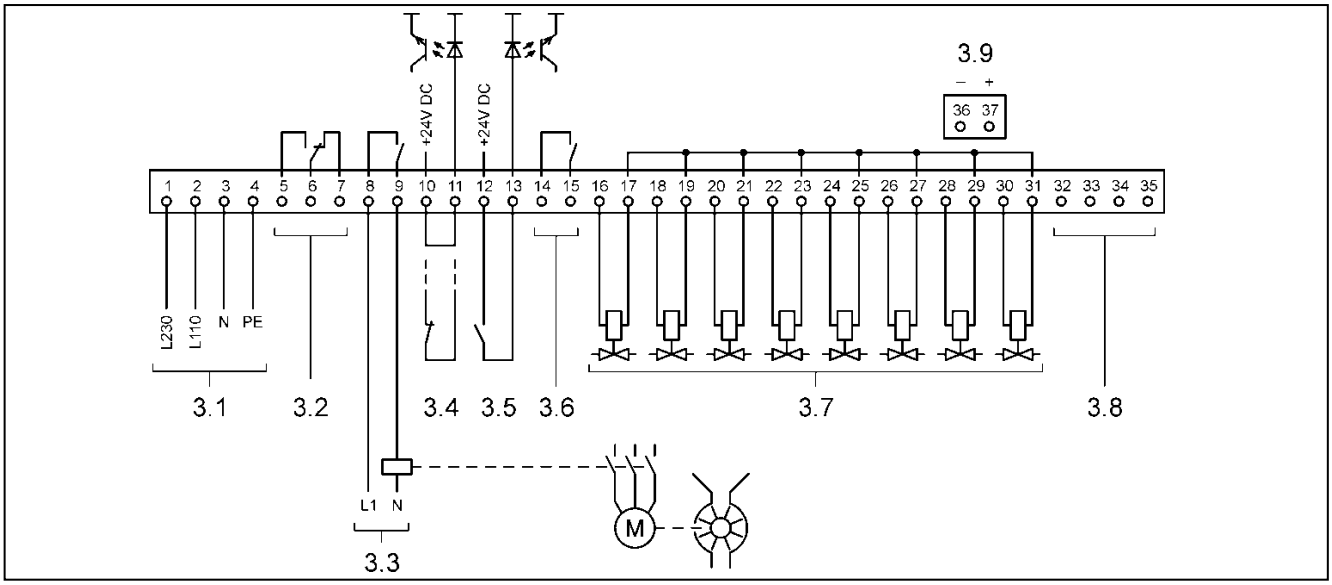

No.	Terminals	Connection / Function
3.1	1 - 4	Power supply (Terminals 1 + 3: 230 V DC / Terminals 2 + 3: 110 V AC)
3.2	5 - 7	Alarm relay
3.3	8 - 9	Discharge device (The switch is closed when fan operates or DTC is active.)
3.4	10 - 11	Input for fan start / stop signal
3.5	12 - 13	Start / Stop-input (external Δ*p*-switch)
3.6	14 - 15	Data link to programming output signal
3.7	16 - 31	Valve outputs; Valves 1 - 8
3.8	32 - 35	Data link to expansion units
3.9	36 - 37	Data link to Δ*p*-external display 4 - 20 mA

11.6.2.2 Terminal diagram of the extension units

NOTICE

Expansion units are only used on filter systems with more than 8 valves.

DFC-08E

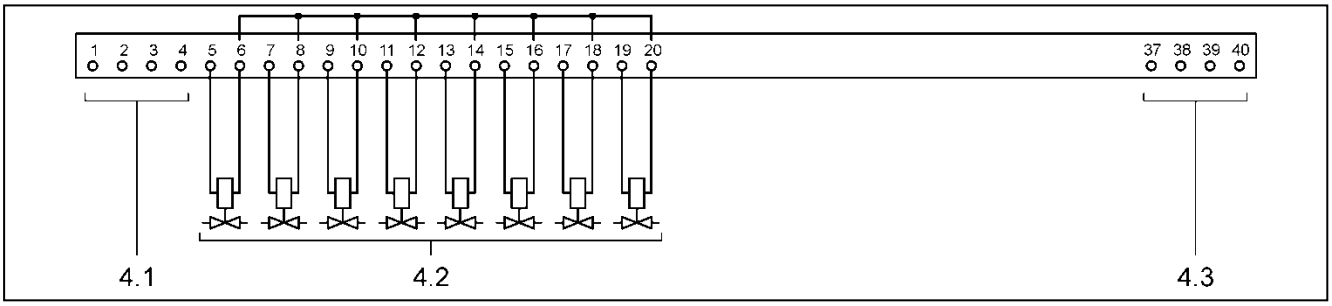

No.	Terminals	Connection / Function
4.1	1 - 4	Data input terminals from main unit
4.2	5 - 20	Terminals for 1 - 8 solenoid valves
4.3	37 - 40	Data output terminals for the following expansion units

DFC-16E

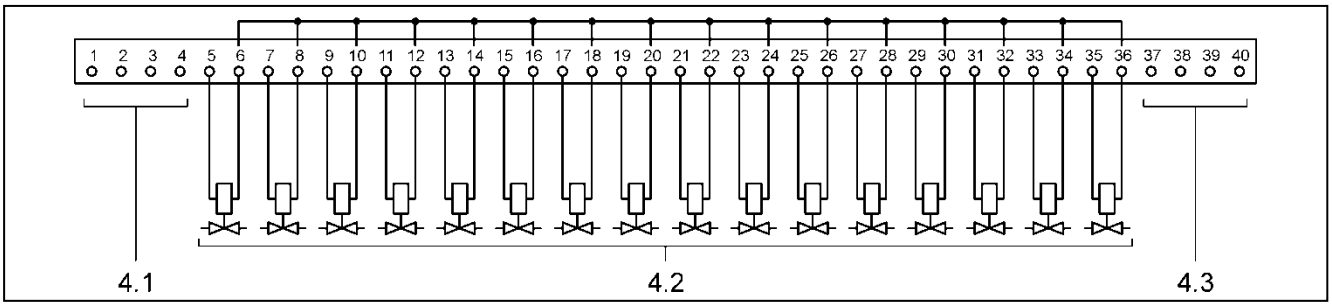

No.	Terminals	Connection / Function
4.1	1 - 4	Data input terminals from main unit
4.2	5 - 36	Terminals for 1 - 16 solenoid valves
4.3	37 - 40	Data output terminals for the following expansion units

11.6.2.3 Connection of expansion units

NOTICE

Expansion units are only used on filter systems with more than 8 valves.

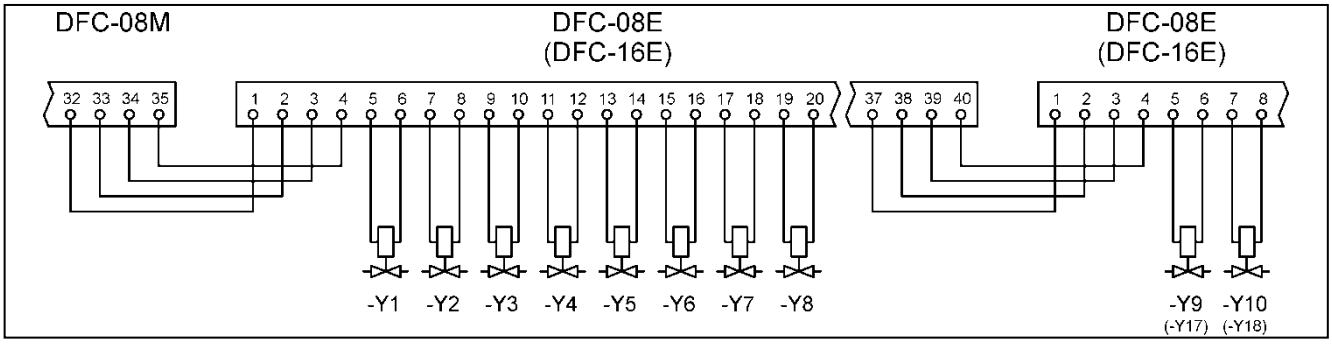

11.6.3 Connection of differential pressure measurement cables

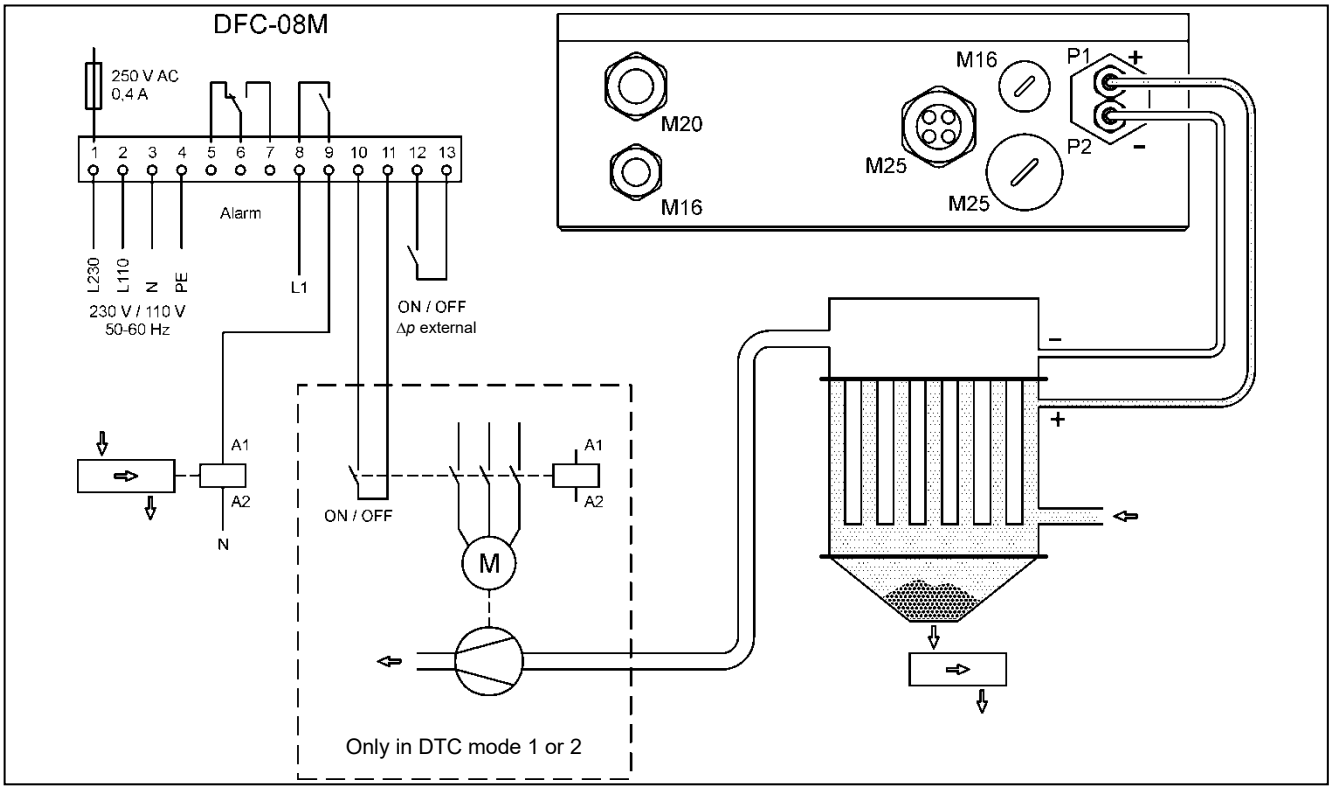

11.6.4 Settings

11.6.4.1 Display and setting elements

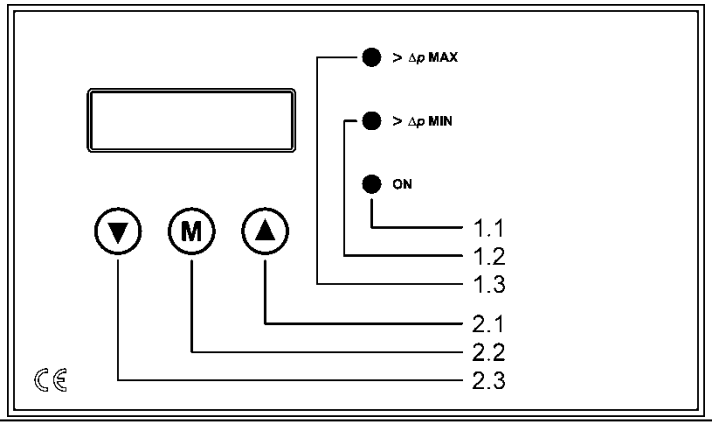

No.	Designation	Function
1.1	LED **„ON“**	Lights up when the device is operating.
1.2	LED **„> Δ*p*-MIN“**	Lights up when the pressure difference is higher than the value **„Δ*p*-MIN“**.
1.3	LED **„> Δ*p*-MAX“**	Lights up when the pressure difference is higher than the value **„Δ*p*-MAX“**. (If Δ*p*-MAX = 0: LED 1.3 lights up when Δ*p* > Δ*p* MIN+600 Pa)
2.1	▲ button	
2.2	**M** button	
2.3	▼ button	

11.6.4.2 Parameter selection

NOTICE

The program returns automatically to the operation level if no key has been pressed for at least 1 minutes.

It is necessary to switch from the operating mode to the parameter selection mode in order to check or change the setting of a parameter.

➔ Press the buttons ▲ and ▼ at the same time (longer than 3 seconds).

The message **“Setting mode parameters 1-27”** is shown briefly on the display.

Parameter 1 is then displayed. The current parameter value is shown in the second line of the display.

➔ Select the required parameter by briefly pressing the ▲ button (scroll upwards) or the ▼ button (scroll downwards).

11.6.4.3 Enter code

The appropriate code has to be entered if the message **“Enter code 130”** is shown on the display.

Code 1 = 15 (should only be known to instructed technical personnel).
Code 2 is only known to the manufacturer.

Enter the code as follows:

➔ Button ▲: Press briefly to gradually increase the default value **“130”**
➔ Button ▼: Press briefly to gradually decrease the default value **“130”**

Press the button ▲ or ▼ for as long as necessary until the valid code is shown on the display (minimum value 2 / maximum value 250).

The value can be changed more rapidly by pressing and holding the button ▲ or ▼.

After this, confirm the entered code:

➔ Press button **M** (longer than 3 seconds)

If the code was entered correctly, the message **"Code accepted"** is shown briefly on the display. Following this, it is possible to alter the parameter setting (→ section **"Parameter setting"**).

If no button is pressed within 1 minute during code input, the message **"Code input aborted"** is shown briefly on the display. The parameters continue to be disabled.

If the wrong code is entered, the message **"Code incorrect"** is shown briefly on the display. Proceed as described above to correct the code.

11.6.4.4 Parameter setting

NOTICE

The program returns automatically to the operation level if no key has been pressed for at least 1 minutes.

NOTICE

An appropriate code has to be entered to adjust some parameters.

The value of the selected parameter can be altered as follows:

➔ Press button **M** (longer than 3 seconds)

The selected parameter is unlocked or the message **"Code input 130"** is shown on the display (-> section **"Enter code"**).

The **"> d*p* MAX", "> d*p* MIN"** and **"ON"** LEDs flash simultaneously. The parameter value can be altered.

➔ Button ▲: Select then next higher value by pressing briefly
➔ Button ▼: Select then next lower value by pressing briefly

To save the new value as well as quit the setting mode and return to the parameter selection mode:

➔ Press button **M** (longer than 3 seconds)

The message **"Input saved"** appears briefly on the display.

11.6.4.5 Returning to the operating mode

To switch from the parameter selection mode to the operating mode:

➔ Press the buttons ▲ and ▼ briefly at the same time.

11.6.4.6 Parameter list

Parameter	Code*	Text in display Line 1	Explanation	Factory setting	Range
1	–	1 dP-min	Δp min switching point	700 Pa	200 Pa … 4000 Pa
2	–	2 dP-max	Δp max switching point	1300 Pa	0[1], 280 Pa … 4400 Pa
3	–	3 dP-min Alarm	Δp min alarm switching point	0[1]	0[1] … 3000 Pa
4	–	4 dP-max Alarm	Δp max alarm switching point	2300 Pa	0[1] … 5000 Pa
5	1	5 Pulse time	Cleaning valve pulse time	60 ms	15 ms … 2500 ms
6	–	6 Interval 1	Interval time 1	20 s	1 s … 500 s
7	–	7 Interval 2	Interval time 2	10 s	1 s … 500 s
8	–	8 Switching dP	Δp switching point for switchover from interval time 1 to interval time 2	1500 Pa	280 Pa … 4400 Pa
9	–	9 DTC interval	Down-time cleaning interval time (interval time during secondary cleaning)	6 s	1 s … 100 s
10	1	10 Total vlv qty	Total valve number	0	0-120
11	1	11 V. no. DFC-08M	Number of valves on filter controller	0	0-8
12	1	12 Downtime cyc.	No. of down-time cleaning cycles	6	0 … 32
13	1	13 dP DTC max	Parameters for activating down-time cleaning in DTC mode 2 and 3	1000 Pa	280 Pa … 4000 Pa
14	1	14 dP DTC min	Parameters for activating down-time cleaning in DTC mode 3	260 Pa	260 Pa … 2000 Pa
15	1	15 DTC Clean.Mod	Down-Time-Cleaning mode	DTC mode 2[2]	DTC mode 1 DTC mode 2 DTC mode 3[2]
16	–	16 Language	Language of display text	EN[3]	DE, EN, FR, DA, NL, PL, FI, IT, RU, HU, RO, SE[3]

* –: not disabled
1: Disabled. Code 2 input necessary (only known to instructed skilled personnel).
2: Disabled. Code 2 input necessary (only known to the manufacturer).

[1] 0 = Function deactivated.

[2] DTC mode 1: Down-time cleaning is activated when filtration is switched off.
DTC mode 2: Down-time cleaning is only started when the filtration is switched off if the differential pressure has exceeded the value Δp DTC_{max} during operation.
DTC mode 3: Down-time cleaning is started if the differential pressure has fallen below the value Δp DTC_{min} after having previously exceeded the value Δp DTC_{max}. Filtration switch-off is disregarded.

[3] DE German, EN English, FR French, DA Danish, NL Dutch, PL Polish, FI Finnish, IT Italian, RU Russian, HU Hungarian, RO Romanian, SE Swedish

Parameter	Code*	Text in display Line 1	Explanation	Factory setting	Range
17	2	17 Serv. op. hrs	Reset service operating hours counter to 0	–	–
18	2	18 Service-Alarm	Service operating hours alarm	3000 h	0[1], 2000 … 25000 h
19	1	19 Time to f.cl.	Compulsory cleaning time	0[1]	0[1], 1 … 10 h
20	1	20 dP unit	Δp display unit	Pa	Pa, mbar, mm WC, inch WC
21	1	21 No of controllers	Number of controllers	1	1-8
22	1	22 Pulse sequence	Order of cleaning	1	1 = without jump 2 = with jump
23	1	23 Relay function	Function of relay switch 14, 15	2	1 = Signal 3 seconds before and until 7 seconds after cleaning pulse 2 = Signal when cleaning is in operation 3 = Signal service alarm
24	1	24 dp range	Setting the dp range, remote display	0 … 5000 Pa	0 … 1000 Pa 0 … 1500 Pa until 0 … 5000 Pa
25	–	25 Stop End/Go	Mode of cleaning sequence (**“Stop End”** or **“Stop & Go”**)	Stop End[4]	Stop End Stop Go[4]
26	2	26 Factory set.	Loads works setting	–	–
27	1	27 Test mode	Test operation All valves are activated in sequence with an interval time of 2 s. Test operation stop: Press M-key	OFF	OFF, ON

* –: not disabled
1: Disabled. Code 2 input necessary (only known to instructed skilled personnel).
2: Disabled. Code 2 input necessary (only known to the manufacturer).

[1] 0 = Function deactivated.

[4] Stop End: After stopping the cleaning function (falling below dP-min (parameter 1)), the cleaning cycle in operation continues until completed.
Stop Go: After stopping the cleaning function (falling below dP-min (parameter 1)), cleaning is halted immediately. When cleaning is restarted again, it recommences at that valve which follows the last cleaned valve.

11.6.5 Operating modes

The LEDs 1.1 to 1.3 indicates the operating states of the controller and the differential pressure of the filter is displayed in plain text:

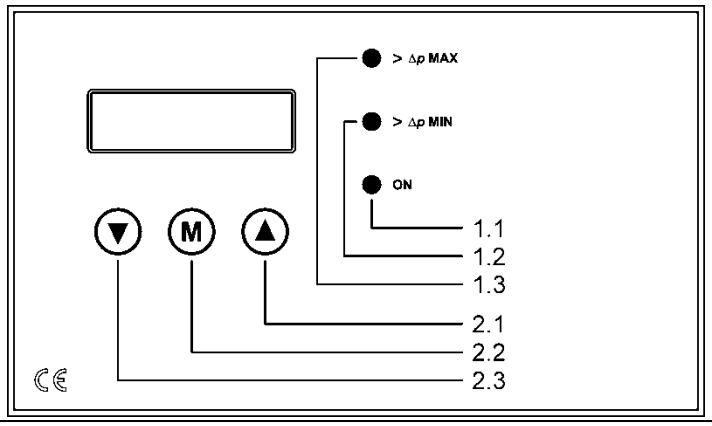

No.	Designation	Function
1.1	LED **„ON“**	Lights up when the device is operating.
1.2	LED **„> Δ*p*-MIN“**	Lights up when the pressure difference is higher than the value **„Δ*p*-MIN“**.
1.3	LED **„> Δ*p*-MAX“**	Lights up when the pressure difference is higher than the value **„Δ*p*-MAX“**. (If Δ*p*-MAX = 0: LED 1.3 lights up when Δ*p* > Δ*p* MIN+600 Pa)

LEDs 1.1 + 1.2 + 1.3 flashes: Alarm – The value of the differential pressure Δ*p*-MAX is exceeded.

ALARM, OTHER CAUSES: Only signalled by switching the alarm contact (terminals 5, 6, 7).

11.6.5.1 Test Operation

➔ Select parameter 27 **“Test Operation”**.
➔ Enter code 1.
➔ Select **“ON”** setting.

All connected valves are then tested by activation in succession with an interval pause time of 2 seconds.

NOTICE

In the case of filter systems with one filter controller, the number of the active valve output is shown on the display.

In the case of filter systems with a filter controller and one or more expansion units, the number of the respective controller unit and the number of the active valve output are shown on the display.

NOTICE

Test operation ends automatically upon completion of the test program.

11.6.5.2 Differential pressure-controlled cleaning

Differential pressure controlled cleaning is active if the Δp-Max switching point (parameter 2) has been set to a value greater than 0. Cleaning starts with pause time 1 (parameter 6) if the rising differential pressure has reached the set Δp-Max value. The differential pressure decreases again after a while because of cleaning. Cleaning is halted if the falling differential pressure reaches the set Δp-Min switching point (Parameter 1).

If the differential pressure continues to rise despite active cleaning and reaches the set Δp switching point (parameter 8), cleaning is carried out with the shorter pause time 2 (parameter 7). If the decreasing differential pressure falls below the Δp switching point, pause time 1 is active again during cleaning.

11.6.5.3 Down-time cleaning

Down-Time-Cleaning varies according to the selected mode.

The following cycle begins after requesting down-time cleaning:

- Membrane valve 1 opens
- Pulse time
- Membrane valve 1 closes
- Pause (Down-Time-Cleaning pause time)
- Membrane valve 2 opens
- Pulse time
- Membrane valve 2 closes
- Pause (Down-Time-Cleaning pause time)
- …

This cycle continues until all installed membrane valves have been processed.

Down-time cleaning is only terminated after the set number of down-time cycles has been completed.

Down-Time-Cleaning modes 1, 2 or 3 (hereinafter abbreviated to DTC mode) are available for selection:

DTC-Mode 1

The down-time cleaning mode starts when the fan is switched off.

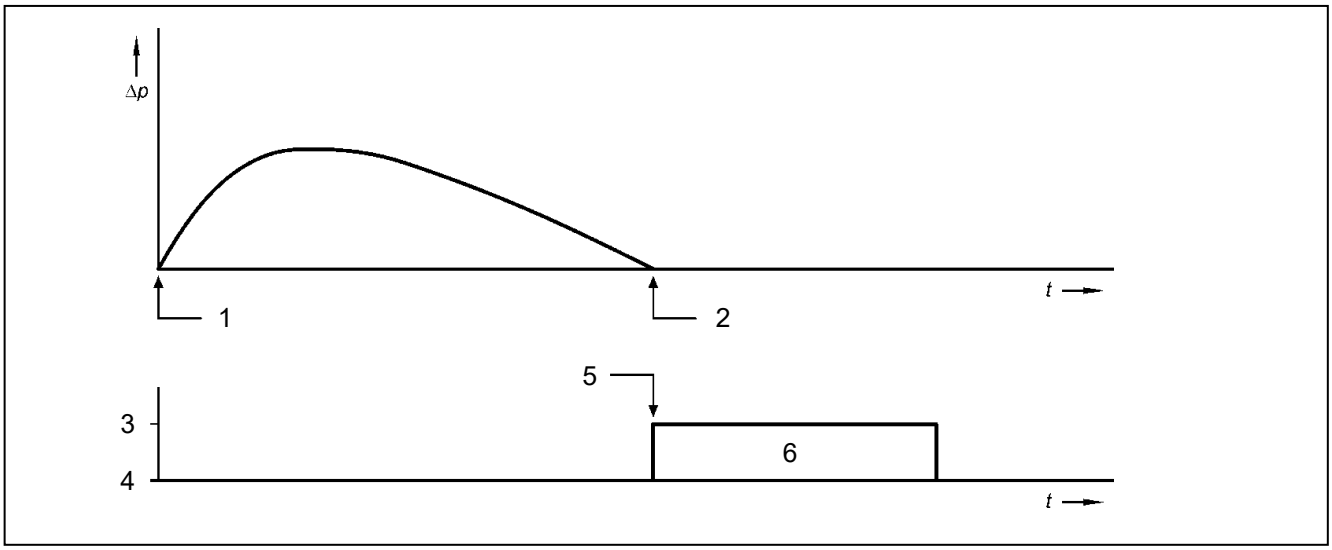

1	Fan ON	4	Down-Time-Cleaning OFF
2	Fan OFF	5	Δp DTC max starts down-time cleaning
3	Down-Time-Cleaning ON	6	Down-Time-Cleaning (DTC)

DTC-Mode 2

Down-Time-Cleaning only starts when the fan is switched off, if the differential pressure has exceeded the value Δp DTC max during operation.

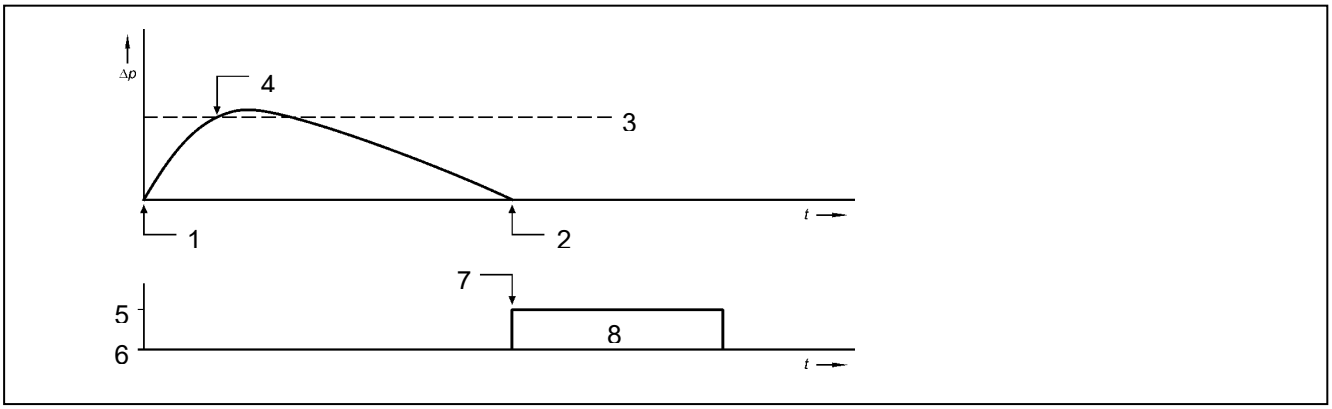

1	Fan ON	5	Down-Time-Cleaning ON
2	Fan OFF	6	Down-Time-Cleaning OFF
3	Δp DTC max	7	Δp DTC max starts down-time cleaning
4	Δp exceeds the value Δp DTC max	8	Down-Time-Cleaning (DTC)

DTC-Mode 3

Down-time cleaning starts if the differential pressure falls below the value Δp DTC min after having previously exceeded the value Δp DTC max. Switching off fan is disregarded.

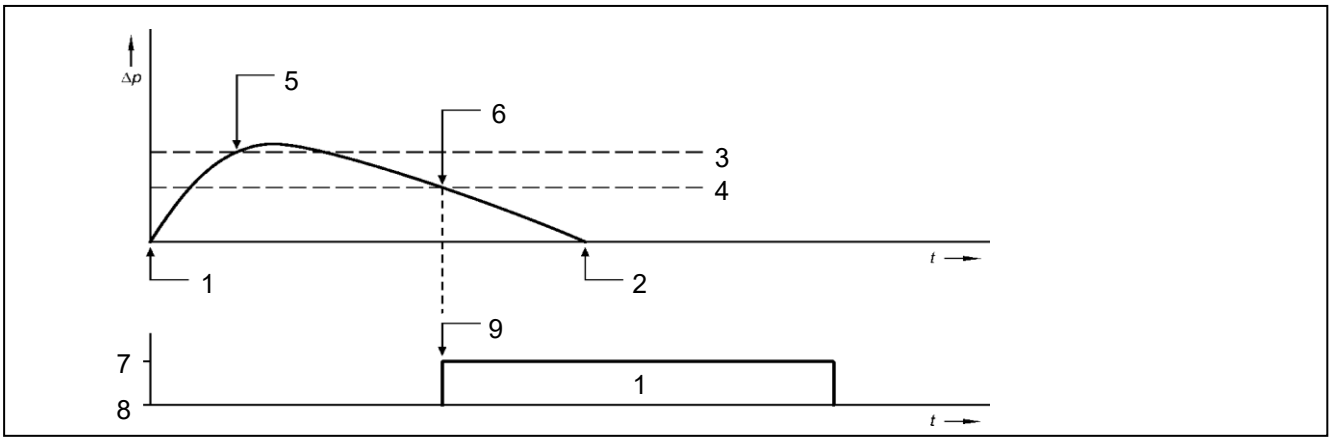

1	Fan ON	6	Δp falls below the value Δp DTC min
2	Fan OFF	7	Down-Time-Cleaning ON
3	Δp DTC max	8	Down-Time-Cleaning OFF
4	Δp DTC min	9	Δp DTC max starts down-time cleaning
5	Δp exceeds the value Δp DTC max	10	Down-Time-Cleaning (DTC)

11.6.5.4 Cleaning in connection with the start / stop input

The terminals 12 and 13 can be bridged with a potential free switch. Open switch has no impact on the controller. Closed switch will immediately stop the cleaning sequence. Display will show **“Cleaning stopped”**. Terminals 12 and 13 does not stop DTC cleaning.

11.6.5.5 Obligatory cleaning

A complete cleaning cycle is carried out if the set obligatory cleaning period (parameter 19) has come to an end and no cleaning has taken place by then.

11.6.5.6 Pulse sequence

The pulse sequence can be adapted to the filter size in the case of filter systems with one filter controller and one or more expansion units.

NOTICE

The number of control units has to be set in parameter 21.

If the value **“1”** has been set in parameter 22 **“Pulse sequence”**, the valves are processed in series without any jumps (example for a filter system with one filter controller and three expansion units with 4 valves each).

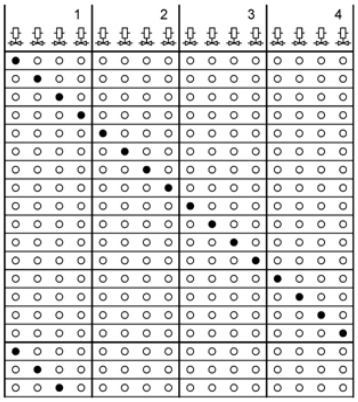

If the value **“2”** has been set in parameter 22 **“Pulse sequence”**, the valves are processed with jumps (example for a filter system with one filter controller and three expansion units with 4 valves each).

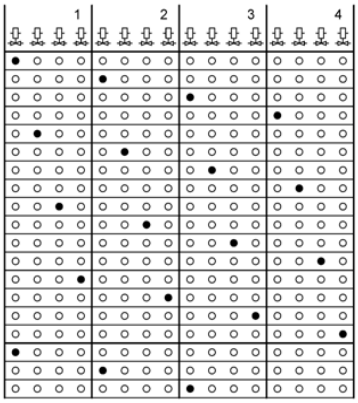

11.6.6 Text messages on the display

11.6.6.1 Operating signals

Display	Information
DFC-08M Version #.##	Status: Reset-mode Display: Program-Version The text is displayed for 5 seconds after power is turned on.
Stand-by dP #### Pa	Status: Fan OFF Display: Actual pressure difference in Pa (factory setting) / mbar / mmWC / inchWC
Cleaning OFF dP #### Pa	Status: Fan ON <u>and</u> $\Delta p < \Delta p$-MAX Display: Actual pressure difference in Pa (factory setting) / mbar / mmWC / inchWC
Chamber# Valve# XX# dP #### Pa	Status: Fan ON <u>and</u> $\Delta p > \Delta p$-MAX Display: actual cleaned extension unit next cleaned valve XX = time to next cleaning pulse Actual pressure difference in Pa (factory setting) / mbar / mmWC / inchWC
Cleaning stopped dP #### Pa	Status: The contact connected to the start / stop input (terminals 12, 13) is closed. Display: Actual pressure difference in Pa (factory setting) / mbar / mmWC / inchWC
Test mode K# V# XX# dP #### Pa	Status: The test mode (parameter 27) has been activated. All valves are activated one after the other with a pause time of 2 seconds. Display: K* = actual cleaned expansion unit V = actual activated valve XX = time to next cleaning pulse Actual pressure difference in Pa (factory setting) / mbar / mmWC / inchWC * only for filters with one or more expansion units

11.6.6.2 Additional information in text display

Short pressing of the ▲ or ▼ button displays the following operation parameters one after the other. The display returns to the last shown status if no button is pressed within 3 seconds.

Operating hours ##### h	Filter operating hours.
Time to service ##### h	Duration in hours until next filter service.
T. to forc. cl. ##### h	Duration in hours until start of the next filter compulsory cleaning.

11.6.6.3 Alarm signals

In the event of an alarm, the cause of the alarm is shown on the display. The alarm message alternates with the previously displayed status message at 3-second intervals. If several alarm messages are present simultaneously, the messages are displayed consecutively in alternation with the status message.

Display	Information
dP-max Alarm	The differential pressure has exceeded the set level of **"Δ*p* Alarm MAX"** (parameter 4).
dP-min Alarm	The differential pressure has fallen below the set level of **"Δ*p* Alarm MIN"** (parameter 3).
DFC-XE Fault	An error is found on one of the connected extension units.
Vent. DFC-08M Fault	An error has occurred on one of the valves connected to the filter controller.
Set no. of valves incorrect	The value of the parameters 10, 11 or 21 is incorrect.
Maintenance required	The time set by parameter 18 **"Service-Operating hours-Alarm"** has expired. A maintenance overhaul of the filter system is recommended.

12 Parameter list

WARNING

Electric shocks can lead to serious injuries!

➔ Only qualified electricians may work on electrical equipment.

ATTENTION

Any form of guarantee shall become void if the prescribed parameters are not observed.

NOTICE

An EMERGENCY STOP pushbutton must be located within a maximum radius of 50 m from the filter.

The customer must fit the machine / plant with a filter control. The filter control must be set according to the following parameters.

Designation	Parameter
Δp min switching point	700 Pa
Δp max switching point	1300 Pa
Δp min alarm switching point	0[1]
Δp max alarm switching point	2300 Pa
Cleaning valve pulse time	60 ms
Interval time 1	20 s
Interval time 2	10 s
Δp switching point for switchover from interval time 1 to interval time 2	1500 Pa
Interval time during secondary cleaning	6 s
No. of down-time cleaning cycles	6
Parameters for activating down-time cleaning	1000 Pa
Service operating hours alarm	3000 h
Δp display unit	Pa

[1] 0 = Function deactivated.

13 Troubleshooting

13.1 Behaviour in event of faults

WARNING

Moving machine parts can lead to death or serious injuries!

Prior to service, maintenance and repair work:

- ➔ Disconnect machine / plant from electrical power supply, i.e. disconnect all energy sources using the main switch on the control cabinet (main switch to position **"0"**).
- ➔ Attach a warning sign to main switch that prohibits any operation.
- ➔ Secure main switch with a padlock and remove key.
- ➔ Check that the machine / plant is voltage-free.
- ➔ Depressurize compressed air supply and vent (empty) pressure vessel.

Upon completion of service, maintenance and repair work:

- ➔ Ensure that all safety devices have been put back into place and are functioning.

NOTICE

Fundamental safety instructions (→ section **"Fundamental safety instructions"**) and the corresponding maintenance regulations (→section **"Maintenance"**) must be observed for repair and maintenance work!

The operating manuals of the sup-suppliers must be read and observed without fail prior to carrying out repair and maintenance work!

Local safety regulations apply under all circumstances for operation of the machine / plant irrespective of the safety instructions contained in this manual!

13.2 Troubleshooting with the power supply switched on

WARNING

Moving machine parts can lead to death or serious injuries!

As troubleshooting is extremely dangerous when the power supply is switched on, this method should only be chosen if it is absolutely necessary. Under all circumstances, it may only be carried out by specially trained and qualified personnel.

In case of malfunction of the machine/plant demanding electrical measurements (e.g. current, tension) or verification of the function of motorized parts, a fault finding with connected electrical energy sources might be necessary.

In order to minimize the risks involved with such a procedure, at least the following fundamental safety measures must be gradually taken:

- ➔ Call in additional staff whose task it is to activate one of the emergency-off buttons as soon as there is any danger.
- ➔ Put up signs with the warning **“NO ACCESS - REPAIR/MAINTENANCE WORK WHILE PLANT RUNNING”**.
- ➔ Disconnect and isolate the machine/plant from the power supply.
- ➔ Remove as few protective facilities as necessary.
- ➔ Before you switch the machine/plant on again, make sure that nobody is in the danger zone.
- ➔ Switch the machine/plant on again and make the necessary observations at a safe distance from all moving and live components.
- ➔ Switch the machine/plant off again.
- ➔ Disconnect and isolate the machine/plant from the power supply.
- ➔ Carry out the necessary repairs and install all safety and protective facilities again.
- ➔ Check the machine/plant and the safety system for function ability. We would point out once again that the machine/plant may only be operated with all the safety system components in working order.

13.3 Checklists in event of faults

NOTICE

Any faults, which occur during operation, can be localized and remedied using the following table.

The operating manuals of the sup-suppliers must also be observed without fail!

In the case of all the items marked with * there is an obligation to us during the guarantee period before the repairs are carried out!

13.3.1 Filter

Fault	Possible causes	Action
1 Filter resistance too high	• Filter not cleaned frequently enough	• Check the parameter settings and restore the factory setting if necessary (→ section **"Operation instructions"**) • Use the **"Test run"** function to acoustically check correct functioning of the filter cleaning valves
	• Jet of compressed air too low	• Check compressed-air supply • Check operating pressure in the pressure vessel (min. 5 bar / max. 6 bar) • De-aerate the compressed-air system • Check the pilot voltage on the electrical control • Check the control voltage to the solenoid valves • Replace the valve diaphragm • Replace the solenoid valve • Replace the electrical controller
	• Down-time-cleaning (according to parameter 15) is not performed at the turn-off of the filter	• Check that the electrical connection is correct so that the down-time-cleaning normal stop is commenced
	• Too large amount of material supplied in too short time	• Lower the material supply per time unit or increase plant capacity
	• Filter elements are saturated with dust	• Clean filter elements and, if necessary, replace
2 Separated dust accumulates in dust collection hopper	• Wet dust sticks to the walls	• Ensure that dryer dust is supplied
	• Dust bin[1] full	• Check filling level and empty the dust bin if necessary
	• Single flap valve[1] defective	• Check single flap valve and repair if necessary
	• Rotary valve[1] defective	• Check rotary valve and repair if necessary (→ section **"Supplier documentation"**)
	• Connection hose[1] for venting the dust collector not connected	• Remount the connection hose on the vent connection
3 Dust exit at the filter doors	• Door is not closed correctly	• Close door correctly
	• Filter doors leaking	• Replace seals
4 Dust in cleaned gas	• Defective filter element	• Replace defective filter element
	• Filter element is not mounted correctly	• Mount the filter element correctly
	• Unsuitable filter material used	• Contact our customer service
	• Defective seal mounting plate	• Replace defective seal
5 Dust emerges from the pipe connections during the after-cleaning process	• Missing shut-off damper in the dirty gas duct	• Mount a shut-off damper in the dirty gas duct
	• Leaking shut-off damper	• Check shut-off damper shuts tight
6 Performance too low	• Deposits in the dirty gas duct work	• Clean dirty gas duct work

1 optional equipment

Fault	Possible causes	Action
7 Explosion*	• Explosion	• Establish the causes for the explosion and rectify • Check filter's operational readiness • Check pressure relief devices in accordance with the suppliers' instructions (→ section **"Supplier documentation"**), repair or exchange • Install new burst sensor

* For the Atex version filter

13.3.2 Filter controller

NOTICE

Section **"Operation"** must be observed without fail when remedying faults!

Fault	Possible causes	Action
1 LED ON is not illuminated	• Power failure • Fuse in controller is defective • Emergency stop of the plant is activated • Internal control error	• Check circuit voltage • Check fuse • Replace fuse • Check emergency stop • Contact our customer service
2 No valve activation	• Defect lead connection • Valve setting wrong • Defective line connection • Defect magnet coil • Valve section in-active • Controller defective	• Check cables and cable connections • Check parameters of the controller • Check lines and line connections • Replace magnet coil • Check parameter 21 (Value = number of controller) • Use the **"Test run"** function in the controller to acoustically check correct functioning of the filter cleaning valves • Change set values • Check the hose connections
3 No down-time-cleaning (according to parameter 15)	• Wrong setting • No signal from fan	• Check controller • Apply signal to terminals
4 Cleaning is inefficient	• Pause intervals too long • Operating pressure too low • Valve defect • Pulse duration too short • Cleaning cycle often disrupted • Differential pressure too high • Pause interval 2 is not be activated (→ section **"Parameter list"**)	• Reduce pause intervals • Adjust the operating pressure (min. 5 bar / max. 6 bar) • Pause too short, so that the operating pressure in the pressure vessel is not reached • Check valve and, if necessary, replace • Can be modified in setting mode after consultation of our customer service • Check pressure difference meter and hose connection • Turn-off filter and start down-time-cleaning • Reduce value of parameter **"Switching dP"**

Fault	Possible causes	Action
5 Display fault of the differential pressure	• Hose connection defective	• Clean hoses • Clean hose connection on the filter housing with compressed air (blow direction filter, never in sensor direction) • Remove any bending on the hoses • Check hoses inside the control unit for water, bending and so on • Replace air filter*
6 Pause interval cannot be set below 20 seconds (Parameter 06 and 07)	• Program 1 selected at parameter 23	• **No shut-off damper in dirty gas duct:** Select program 2 or 3 • **Shut-off damper in dirty gas duct present:** A shorter pause interval is not possible
7 Display shows: **"DFC-XE Error"**	• Valve setting wrong • Extension unit of the controller defective	• Check controller • Replace extension unit of the controller

* For the Atex version filter

13.3.3 Explosion vent – for the Atex version filter

Fault	Possible causes	Action
1 Explosion vents leaks	• Sealing defective • Explosion vents destroyed	• Replace explosion vents • Replace explosion vents

13.3.4 Pressure release valve

Fault	Possible causes	Action
1 Pressure release valve leaks during normal use	• Pressure too high during after cleaning • Sealing defective	• Reduce operating pressure • Prior to down-time cleaning, open any existing shut-off dampers in the clean gas duct • Check the pressure release valve in accordance with the suppliers' instructions (→ section **"Supplier documentation"**) and repair if necessary

13.3.5 Electric drives

WARNING

Electric shocks can lead to serious injuries!

➔ Only qualified electricians may work on electrical equipment.

Fault	Possible causes	Action
1 Motor does not run	• Interruption in supply line • Fault in switching unit • Terminal voltage too low • Winding has body contact • Bearing defective • PTC thermistor has been triggered • Winding damage • Fault in converter	• Check terminals • Check or measure line • Replace switching unit • Measure terminal voltage • Check with hand-driven generator or sufficiently high voltage • Replace bearing • Wait until motor has cooled down • Have motor repaired by qualified staff • Observe fault messages*

	Fault	Possible causes	Action
2	Motor starts sluggishly and speed too low under load	• Machine or main voltage too low • Short circuit in coil • Winding has body contact	• Measure voltage • Eliminate shot circuit or install new winding • Check with hand-driven generator or adequately high voltage
3	3-phase AC motor hums at standstill, not when running	• Body contact in the rotor winding • Wrong connection of phases • Rotor grazes	• Establish defective winding section and repair • Check phases • Have motor repaired by qualified staff
4	3-phase AC motor becomes too warm in continuous operation	• Winding short circuit in the stator	• Have checked and rewound by qualified staff
5	Safety fuses burn out or motor protection plate triggers at once	• Short circuit in wire or motor • Motor has body or motor contact • Motor is wrongly wired	• Eliminate short circuit • Have motor repaired by qualified staff • Correct wiring
6	3-phase AC motor becomes too warm in continuous operation	• Load too high • Voltage too high or too low • Single-phase instead of 3-phase operation • Short circuit in coil • Ventilation impaired • Rotor grinds in stator • Foreign matter in air gap	• Measure power input* • Check main voltage and voltage drop up to electric drive* • Check power input of all three lines* • Check supply line for interruption and, if necessary, eliminate or have rewound • Remove dust, chips or the like from air paths • Re-adjust air deflectors • Prevent intake of warm exhaust air • Adjust or replace bearings • Dismantle rotor and clean motor
7	Jerky start	• Short circuit in the rotor winding • Connection to PEN conductor instead of to outer conductor	• Eliminate short circuit or have rewound • Check connections and, if necessary, correct
8	Power input fluctuating with double slip frequency	• Interruption in winding or asymmetry of resistances in rotor or defective short-circuiter	• Measure resistances • Have motor repaired by qualified staff
9	3-phase AC motor runs too slowly or not at all in star delta connection high	• Load too high • Terminal voltage too high	• Relieve load of fan* • Check main voltage on activation
10	Wrong direction of rotation	• Motor disconnected	• Two phases interchanged
11	3-phase AC motor shows excessive no load current	• Terminal voltage too high • Air gap possibly increased during repairs	• Measure main voltage* • Measure air gap at three points and, if necessary, set correctly

14 Maintenance

NOTICE

The operating manuals of the sup-suppliers and the corresponding details on rating and maintenance plates must be observed and followed without fail before starting any maintenance work on the supplier's parts!

NOTICE

Only original spare parts may be used.

When removing screws and bolts, which are no longer fit for use, they must always be replaced by screws and bolts of the same quality (strength, material) and execution.

This section is not a reference manual for comprehensive repairs.

Our after-sales service will be very pleased to provide you with further advice.

Dirt must regularly be removed (depending on the degree of fouling) from the surface of plant parts and from the plant area. Dust and moisture promote corrosion.

The contractually agreed warranty does not relieve the owner of the machine/plant of the need and obligation to conduct regular preventive maintenance from the date of commissioning onwards.

Malfunctions due to insufficient or incorrect maintenance will give rise to high costs and long downtimes during which the machine/plant is not operational.

This chapter only describes the work to be undertaken within the framework of normal maintenance or when replacing worn parts.

The maintenance work is described in sufficient detail to be carried out by trained personnel, familiar with such maintenance work.

The following checklists for maintenance have been drawn up for normal operation of the machine/plant. The recommended intervals are merely guideline values; they refer to the time after commissioning and are stated in operating hours. Depending on actual operating conditions, the intervals required for maintenance may differ from those recommended. You should therefore define your own maintenance requirements.

In order to avoid extended downtimes, we recommend that the most important wear and spare parts be kept in stock at all times.

NOTICE

If carrying out any maintenance or repair work on the machine / plant, attention must be paid that explosive atmospheres (if possible) or any other source of ignition are avoided.

NOTICE

The operating manuals of the sup-suppliers and the corresponding details on rating and maintenance plates must be observed and followed without fail before starting any maintenance work on the supplier's parts!

NOTICE

Only original spare parts may be used.

When removing screws and bolts, which are no longer fit for use, they must always be replaced by screws and bolts of the same quality (strength, material) and execution.

This section is not a reference manual for comprehensive repairs.

Our after-sales service will be very pleased to provide you with further advice.

Dirt must regularly be removed (depending on the degree of fouling) from the surface of plant parts and from the plant area. Dust and moisture promote corrosion.

The contractually agreed warranty does not relieve the owner of the machine/plant of the need and obligation to conduct regular preventive maintenance from the date of commissioning onwards.

Malfunctions due to insufficient or incorrect maintenance will give rise to high costs and long downtimes during which the machine/plant is not operational.

This chapter only describes the work to be undertaken within the framework of normal maintenance or when replacing worn parts.

The maintenance work is described in sufficient detail to be carried out by trained personnel, familiar with such maintenance work.

The following checklists for maintenance have been drawn up for normal operation of the machine/plant. The recommended intervals are merely guideline values; they refer to the time after commissioning and are stated in operating hours. Depending on actual operating conditions, the intervals required for maintenance may differ from those recommended. You should therefore define your own maintenance requirements.

In order to avoid extended downtimes, we recommend that the most important wear and spare parts be kept in stock at all times.

14.1 Safety instructions

DANGER*

Explosive atmosphere! Non-compliance leads to death or serious injuries!

Prior to carrying out control or maintenance work on pressure relief elements:

- ➔ Disconnect machine / plant from electrical power supply, i.e. disconnect all energy sources using the main switch on the control cabinet (main switch to position **"0"**).
- ➔ Secure main switch with a padlock and remove key.
- ➔ Check that the machine / plant is voltage-free.
- ➔ Empty the entire dust collection and transport system completely.

In the case of winter conditions (snow, frost), make sure without fail that the pressure relief elements are free of ice and snow.

* For the Atex version filter

WARNING

Moving machine parts can lead to death or serious injuries!

Prior to service, maintenance and repair work:

- ➔ Disconnect machine / plant from electrical power supply, i.e. disconnect all energy sources using the main switch on the control cabinet (main switch to position **"0"**).
- ➔ Attach a warning sign to main switch that prohibits any operation.
- ➔ Secure main switch with a padlock and remove key.
- ➔ Check that the machine / plant is voltage-free.
- ➔ Depressurize compressed air supply and vent (empty) pressure vessel.

Upon completion of service, maintenance and repair work:

- ➔ Ensure that all safety devices have been put back into place and are functioning.

WARNING

Falls can lead to fatal injuries!

If working above head height:

- ➔ Use tested and approved climbing aids and work platforms.
- ➔ Do **not** use machine parts as climbing aids.

WARNING

Electric shocks can lead to serious injuries!

- ➔ Only qualified electricians may work on electrical equipment.

WARNING

Voltage-carrying parts can lead to serious injuries!

Connecting terminals of the main switch are still live when the mains switch on the control cabinet has been set to **"OFF"** position.

- ➔ Observe markings on connecting terminals.

WARNING

Escaping compressed air can lead to injuries to eyes and face!

➔ Trained technical personnel can only carry out work on pneumatic equipment.

Prior to service, maintenance and repair work:

➔ Depressurize compressed air supply and vent (empty) pressure vessel.

ATTENTION

Flying sparks and heat can cause fires when carrying out welding, cutting and grinding work!

➔ Always switch off machine/plant.
➔ Keep flammable materials at a safe distance.
➔ Have fire extinguishers available.
➔ Observe general fire prevention regulations.

NOTICE

Fundamental safety instructions (→ section **"Fundamental safety instructions"**) must be observed for repair and maintenance work!

The operating manuals of the sup-suppliers must be read and observed without fail prior to carrying out repair and maintenance work!

Local safety regulations apply under all circumstances for operation of the machine / plant irrespective of the safety instructions contained in this manual!

NOTICE

Visual inspections, e.g. to identify leaks or external damage, and re-lubrication can be undertaken during the machine/plant is in operation.

Wear personal safety equipment when carrying out maintenance work.

The safety of personnel carrying out work has priority at all times during maintenance work.

The full extent of work involved must be known prior to commencing maintenance work to enable exact planning of procedures. Make sure that only one person has overall responsibility at all times.

Ensure that these documents have been read and understood by everyone entrusted with maintenance work.

NOTICE

Damage to property from dirt and rust!

If parts of the machine/plant are being dismantled:

➔ Cover openings, bearings, connections etc. in a suitable manner to prevent any dirt penetration.
➔ In the event of longer stoppages, protect all dismantled parts against dirt, rust and damage.

NOTICE

Damage to property from incorrect bolt/screw connections!

➔ Bolts/screws that are no longer suitable for use are to be replaced with bolts/screws of the same quality (strength, material) and design.
➔ Tighten screw connections that have been loosened.

14.2 Checklists for maintenance

14.2.1 Filter

Interval Control point / Maintenance notes

Daily

- Dust bin
  - ➔ Check fill level
  - ➔ If necessary, empty dust bin (→ section **"Repair"**)

Every 720 duty hours or monthly

- Pressure vessel
  - ➔ Check operating pressure (min. 5 bar / max. 6 bar)
  - ➔ Adjust operating pressure if necessary
- Filter housing
  - ➔ Check for dust discharge
  - ➔ If necessary, seal filter housing or exchange damaged parts

Every 4320 duty hours or every 6 months

- Electrical connection for discharge static electricity
  - ➔ Check for corrosion
  - ➔ If necessary, re-establish electrical connections
- Filter housing
  - ➔ Check for tightness, deposits and wear
  - ➔ If necessary, seal filter housing or exchange damaged parts
  - ➔ If necessary, remove any deposits
- Filter elements
  - ➔ Check for tightness, deposits and wear
  - ➔ If necessary, exchange damaged filter elements (→ section **"Repair"**)
  - ➔ If necessary, remove any deposits
- Inspection door
  - ➔ Check for tightness
  - ➔ If necessary, replace seals
- Flange connections
  - ➔ Check for tightness
  - ➔ If necessary, replace seals
- Dust bin
  - ➔ Check for tightness
  - ➔ If necessary, replace seal in bracket
- Hose connections Filter/Controller
  - ➔ Check for wear and tightness
  - ➔ If necessary, replace hose connections

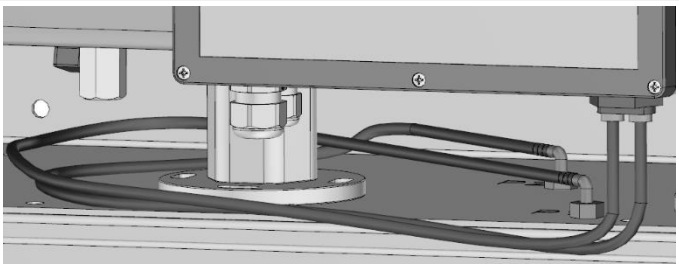

14.2.2 Filter controller

Interval Control point / Maintenance notes

Daily

- Controller
  ➔ Check for fault indication

Every 720 duty hours or monthly

- Cleaning
  ➔ Use the **"Test operation"** function to acoustically check correct functioning of the filter cleaning valves
  ➔ Check if down-time-cleaning is activated
- Controller box
  ➔ Clean controller box outside with a moist cloth

Every 17500 duty hours or every 2 years – for the Atex version filter

- Air filter (1) for filter / controller hose connections
  ➔ Replace air filter

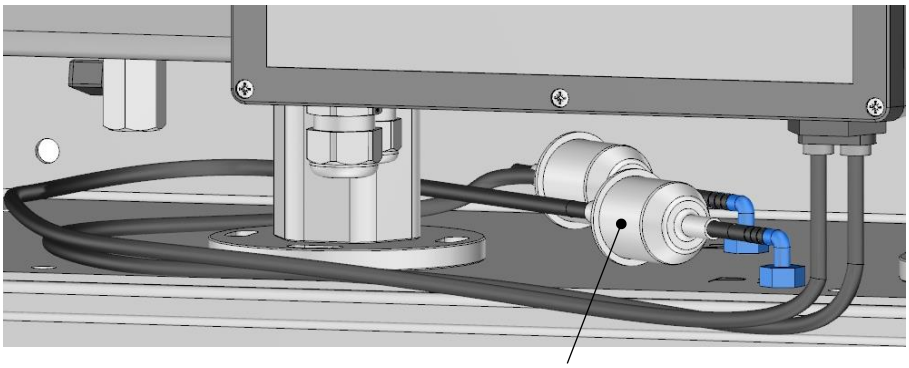

NOTICE

Before opening the filter controller, make sure that no explosive atmosphere exists and that there are no dust deposits on the filter controller. If necessary, wipe the housing down with a damp cloth.

The housing lid must be mounted dust-tight. The lid seal must be checked before installing the lid to make sure that it is in a perfect condition. The 6 screws of the housing lid must be tightened securely.

14.2.3 Explosion vent – for the Atex version filter

Interval Control point / Maintenance notes

Every 720 duty hours or monthly

- Explosion vent
  ➔ Check for tightness, deposits and damages
  ➔ Remove any deposits
  ➔ In the case of leaks or damage: Exchange explosion relief panel

15 Repair

NOTICE

The drawings in the following instructions have been simplified in part in their graphic representation.

The operator's service personnel may only carry out the maintenance/repair work described in this section.

Work is described in this section which may occur as part of normal maintenance/repair or when replacing parts subject to wear and tear.

Please contact our Service Department in the event of any major maintenance/repair work.

15.1 Safety instructions

WARNING

Moving machine parts can lead to death or serious injuries!

Prior to service, maintenance and repair work:

- ➔ Disconnect machine / plant from electrical power supply, i.e. disconnect all energy sources using the main switch on the control cabinet (main switch to position **"0"**).
- ➔ Attach a warning sign to main switch that prohibits any operation.
- ➔ Secure main switch with a padlock and remove key.
- ➔ Check that the machine / plant is voltage-free.
- ➔ Depressurize compressed air supply and vent (empty) pressure vessel.

Upon completion of service, maintenance and repair work:

- ➔ Ensure that all safety devices have been put back into place and are functioning.

WARNING

Falls can lead to fatal injuries!

If working above head height:

- ➔ Use tested and approved climbing aids and work platforms.
- ➔ Do **not** use machine parts as climbing aids.

WARNING

Voltage-carrying parts can lead to serious injuries!

Connecting terminals of the main switch are still live when the mains switch on the control cabinet has been set to **"OFF"** position.

- ➔ Observe markings on connecting terminals.

WARNING

Electric shocks can lead to serious injuries!

➔ Only qualified electricians may work on electrical equipment.

WARNING

Escaping compressed air can lead to injuries to eyes and face!

➔ Trained technical personnel can only carry out work on pneumatic equipment.

Prior to service, maintenance and repair work:

➔ Depressurize compressed air supply and vent (empty) pressure vessel.

ATTENTION

Flying sparks and heat can cause fires when carrying out welding, cutting and grinding work!

➔ Always switch off machine/plant.
➔ Keep flammable materials at a safe distance.
➔ Have fire extinguishers available.
➔ Observe general fire prevention regulations.

NOTICE

Fundamental safety instructions (→ section **"Fundamental safety instructions"**) must be observed for repair and maintenance work!

The operating manuals of the sup-suppliers must be read and observed without fail prior to carrying out repair and maintenance work!

Local safety regulations apply under all circumstances for operation of the machine / plant irrespective of the safety instructions contained in this manual!

NOTICE

Damage to property from dirt and rust!

If parts of the machine/plant are being dismantled:

➔ Cover openings, bearings, connections etc. in a suitable manner to prevent any dirt penetration.
➔ In the event of longer stoppages, protect all dismantled parts against dirt, rust and damage.

NOTICE

Damage to property from incorrect bolt/screw connections!

➔ Bolts/screws that are no longer suitable for use are to be replaced with bolts/screws of the same quality (strength, material) and design.
➔ Tighten screw connections that have been loosened.

15.1.1 Replace filter cartridge

CAUTION

Non-compliance can lead to medium or minor injuries!

Following personal protection equipment is to be worn:

- ➔ Protective goggles
- ➔ Dust protection mask
- ➔ Safety gloves

NOTICE

Make sure that no dust escapes into the environment. Disposal must be carried out according to current national legislation.

Disassembly

- ➔ Switch off machine / plant.

NOTICE

Before proceeding with the next steps, ensure that automatic secondary cleaning of the filter elements has been completed after switching off the machine/plant (according to the setting of parameter 15).

- ➔ Unscrew inspection door and remove or undo locking screws and open inspection door.
- ➔ Press the locking lever up until it stops.
- ➔ Pull out the filter module.
- ➔ Undo screws (4x) on the filter cartridge to be replaced.
- ➔ Pull the filter cartridge out of the assembly plate.

Assembly

NOTICE*

Ensure that the earthing cable is jammed between filter cartridge and assembly plate when installing the filter cartridge.

The filter cartridge is only securely earthed if the earthing cable has been positioned and jammed between the filter cartridge and assembly plate.

* For the Atex version filter

- ➔ Insert a new filter cartridge in the assembly plate.
- ➔ Secure filter cartridge to the assembly plate with screws (M 8 x 40 mm) and serrated washers.
- ➔ Place the filter module on the mounting rails and push it back as far as possible.

NOTICE*

The filter is only reliably earthed if the filter module is pressed against the filter housing by the locking lever.

* For the Atex version filter

- ➔ Press the locking lever down until it stops in order to ensure sealing between the dirty gas chamber and the clean gas chamber.

- ➔ Examine seal on inspection door for signs of damage and replace if necessary.
- ➔ Check mating face on filter housing for fouling and remove dirt if necessary.
- ➔ Lift inspection door onto the retaining bolts and screw on or close inspection door and tighten locking screws.
- ➔ Switch machine / plant on again.

15.1.2 Replace filter module

CAUTION

Non-compliance can lead to medium or minor injuries!

Following personal protection equipment is to be worn:

- ➔ Protective goggles
- ➔ Dust protection mask
- ➔ Safety gloves

NOTICE

Make sure that no dust escapes into the environment. Disposal must be carried out according to current national legislation.

Disassembly

- ➔ Switch off machine / plant.

NOTICE

Before proceeding with the next steps, ensure that automatic secondary cleaning of the filter elements has been completed after switching off the machine/plant (according to the setting of parameter 15).

- ➔ Unscrew inspection door and remove or undo locking screws and open inspection door.
- ➔ Press the locking lever up until it stops.
- ➔ Pull out the filter module.

Assembly

- ➔ Place the new filter module on the mounting rails and push it back as far as possible.

NOTICE*

The filter is only reliably earthed if the filter module is pressed against the filter housing by the locking lever.

* For the Atex version filter

- ➔ Press the locking lever down until it stops in order to ensure sealing between the dirty gas chamber and the clean gas chamber.
- ➔ Examine seal on inspection door for signs of damage and replace if necessary.
- ➔ Check mating face on filter housing for fouling and remove dirt if necessary.
- ➔ Lift inspection door onto the retaining bolts and screw on or close inspection door and tighten locking screws.
- ➔ Switch machine / plant on again.

15.1.3 Replace diaphragm

Disassembly

➔ Switch off machine / plant.

NOTICE

Before proceeding with the next steps, ensure that automatic secondary cleaning of the filter elements has been completed after switching off the machine/plant (according to the setting of parameter 15).

➔ Switch off the compressed air supply and depressurize the compressed air system.
➔ Open the condensation drain valve on the pressure tank in order to vent the pressure tank and drain off any condensation or oil.

NOTICE

The pressure gauge on the pressure vessel must show 0 bar.

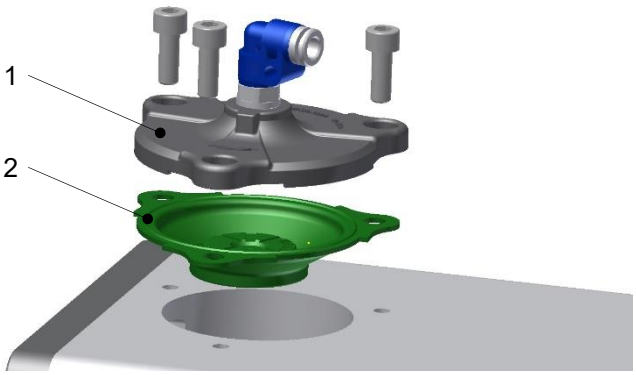

➔ Unscrew cover (1) on cleaning valve.
➔ Remove diaphragm (2).

Assembly

➔ Check that sealing surfaces on pressure vessel and cover of cleaning valve are clean and clean them if necessary.
➔ Insert a new diaphragm (2).
➔ Refit cover (1) of cleaning valve and screw it into place.
➔ Close the condensation drain valve on the pressure tank.
➔ Switch compressed air supply on again.
➔ Switch machine / plant on again.

15.1.4 Residual dust disposal

CAUTION

Non-compliance can lead to medium or minor injuries!

Following personal protection equipment is to be worn if emptying the dust bin:

- ➔ Protective goggles
- ➔ Dust protection mask
- ➔ Safety gloves

NOTICE

The dustbin must be emptied when necessary. Residual dust must not be stored in the dustbin for any length of time (maximum 6 months).

Before emptying the dustbin, ensure that the machine/plant has been switched off and that automatic secondary cleaning of the filter elements has been completed after switching off the machine/plant.

Procedure

➔ Switch off machine / plant.

NOTICE

Before proceeding with the next steps, ensure that automatic secondary cleaning of the filter elements has been completed after switching off the machine/plant (according to the setting of parameter 15).

➔ Push the clamping lever on the dust collector hopper upwards.
➔ Pull out dustbin and empty it.

NOTICE

Make sure that no dust escapes into the environment. Disposal must be carried out according to current national legislation.

➔ Push the dust bin in the rails underneath the dust collection hopper as far as it will go to the rear.
➔ Push the clamping lever down.

NOTICE

Pay attention that the dust bin is installed correctly again underneath the dust collection hopper as otherwise it is not possible to guarantee a correct seal with the dust collection hopper.

➔ Switch machine / plant on again.

16 Spare parts stock

An important precondition for the continual operation of the machine / plant is a stock of the most important wear and spare parts at the installation site.

Please use the spare parts lists and the corresponding sketches to order spare parts.

We only assume a warranty for the original spare parts we have supplied.

We would like to expressly point out that the original spare parts and accessories that we have not supplied have not been tested and approved by us. The installation and / or use of such products can therefore, under certain circumstances, have a negative impact on the specified properties of the machine / plant and thus reduce the active and / or passive safety measures. We will assume no liability or warranty for damage resulting from the use of non-original spare parts and accessories.

In order to ensure prompt and smooth processing and to avoid time-consuming queries and incorrect deliveries, the following data is to be specified when ordering spare parts:

- Project no.
- Type of the unit
- Designation
- Item no.
- Quantity
- Mode of shipment
- Address for delivery and invoice
- Required delivery time

16.1 Spare parts lists

NOTICE

The spare parts are defined as follows:

1) Type
   - V = Wear parts
   - R = Spare parts

2) Require stage
   - I = stock keeping absolutely necessary (very important part)
   - II = stock keeping recommended (important part)
   - III = stock keeping not absolutely necessary

16.1.1 Inspection door

Pos.	Installed quantity	Designation Technical specifications	Item no.	Type V/R[1)] Require stage[2)]
1	1	Seal for inspection door L = …. m	5502679	V II

16.1.2 Cartridge filter module

Pos.	Installed quantity	Designation Technical specifications	Item no.	Type V/R[1)] Require stage[2)]
1	16	Filter cartridge Type: ……	X	V I
2	4	Mounting plate including seal	5501098	R III
3	4	Seal	5502264	V I
4	64	Screw	5502169	R III
5	64	Serrated Lock Washer	7994071	R III

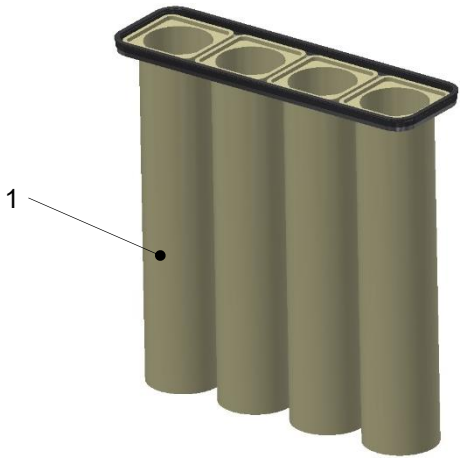

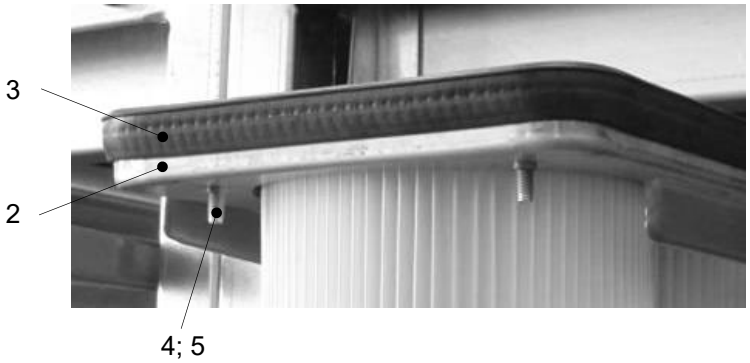

16.1.3 Cassette filter module

Pos.	Installed quantity	Designation Technical specifications	Item no.	Type V/R[1)] Require stage[2)]
1	X	Filter cassette Type: …..	X	V I
2	4	Seal	5502264	V I

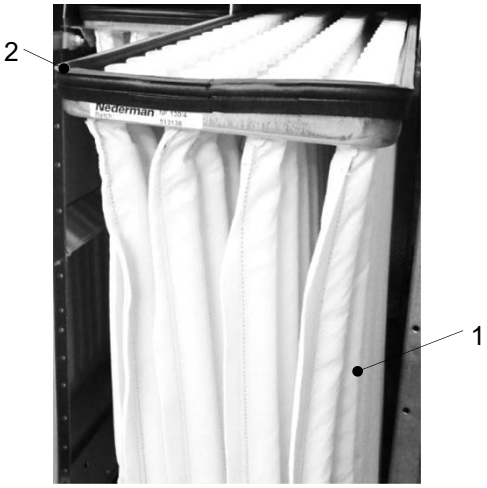

16.1.4 Securing arm

Pos.	Installed quantity	Designation Technical specifications	Item no.	Type V/R[1)] Require stage[2)]
1	6	Securing arm	5501095	R III
2	6	Hexagon screw	5502238	R III
3	6	Hexagon nut	5502247	R III

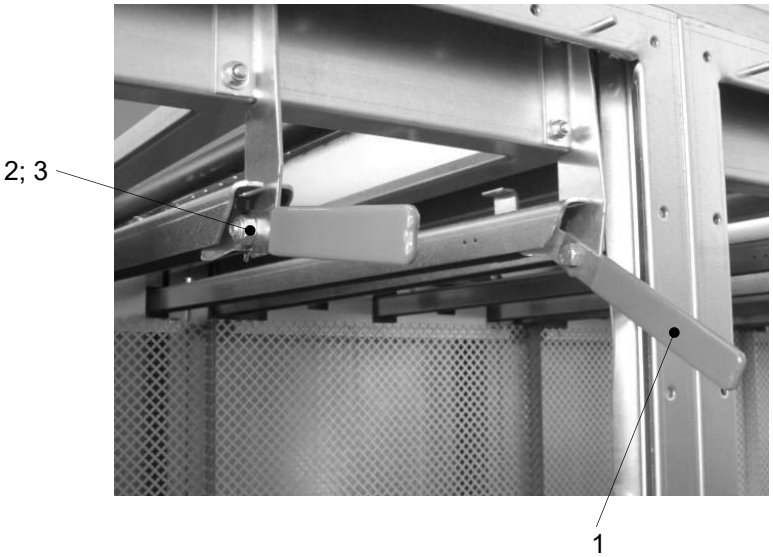

16.1.5 Compressed air facility

Pos.	Installed quantity	Designation Technical specifications	Item no.	Type V/R[1)] Require stage[2)]
1	4	Valve cover complete	X	R III
2	4	Membrane	5116785	V I
3	1	Manometer	5500234	R III

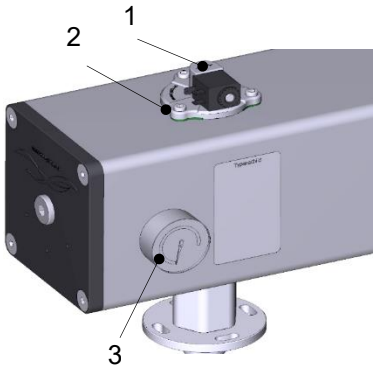

16.1.6 Filter controller

Pos.	Installed quantity	Designation Technical specifications	Item no.	Type V/R[1)] Require stage[2)]
1	1	Controller Type: DFC-08M	X	R III

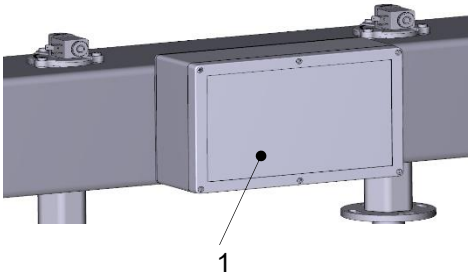

16.1.7 Filter controller

Pos.	Installed quantity	Designation Technical specifications	Item no.	Type V/R[1)] Require stage[2)]
1	1	Extension for filter controller Type: …..	X	R III

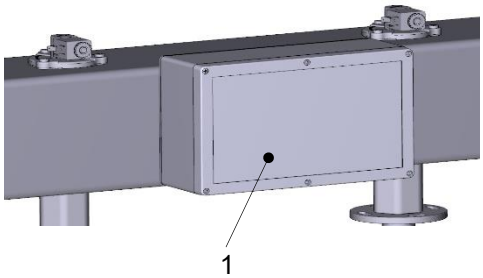

16.1.8 Differential pressure measurement

Pos.	Installed quantity	Designation Technical specifications	Item no.	Type V/R[1)] Require stage[2)]
1	2	Elbow connection	5502191	R III
2	2	Nut for elbow connection	5502202	R III
3	2	Hose L = …. m	5502193	R III
4	2	Air filter – for the Atex version	5502252	R III

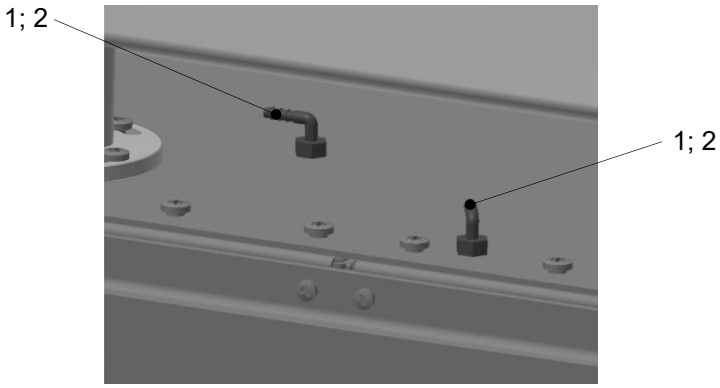

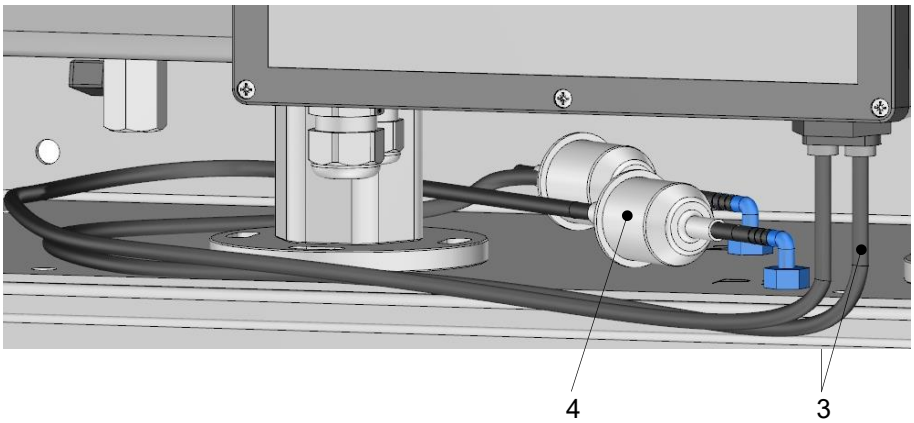

16.1.9 Residual dust disposal

Pos.	Installed quantity	Designation Technical specifications	Item no.	Type V/R[1)] Require stage[2)]
1	1	Hose (Set) L = 0,7 m	5505041	R III
2	1	Plastic bag	5502695	R III

16.1.10 Accessories

Pos.	Installed quantity	Designation Technical specifications	Item no.	Type V/R[1)] Require stage[2)]
3	1	Filter regulator (Set) Type: MC202-D00	5500951	R III
4	X	Explosion vent Type: …… mm	X	V I
5	1	Explosion sensor Type: SE-HT	5502253	R I
6	X	Explosion relief valve Type: 480 EVN2.0	5505010	R II
7	1	Flashing alarm lamp	5500602	R III
8	X	Filter element for safety filter	5512555	R III

17 Decommissioning and Dismantling

NOTICE

Observe the corresponding legal regulations for avoiding accidents in the respective country!

17.1 Decommissioning

WARNING

Moving machine parts can lead to death or serious injuries!

Prior to decommissioning:

- ➔ Disconnect machine / plant from electrical power supply, i.e. disconnect all energy sources using the main switch on the control cabinet (main switch to position **"0"**).
- ➔ Secure main switch with a padlock and remove key.
- ➔ Check that the machine / plant is voltage-free.
- ➔ Depressurize compressed air supply and vent (empty) pressure vessel.

WARNING

Electric shocks can lead to serious injuries!

- ➔ Only qualified electricians may work on electrical equipment.

WARNING

Voltage-carrying parts can lead to serious injuries!

Connecting terminals of the main switch and the inner lighting of the control cabinet are still live when the mains switch on the control cabinet has been set to **"0"** position.

- ➔ Observe markings on connecting terminals.

NOTICE

Decommissioning may only be carried out by authorized and specialist personnel.

The following activities must be carried out to decommission the machine / plant:

- ➔ Run the machine / plant until completely empty, i.e. the machine / plant must be run without material infeed for as long as necessary until no more dust is discharged.
- ➔ Switch machine / plant off.
- ➔ Disconnect the machine / plant completely from all power and supply sources/connections.

17.2 Dismantling

DANGER

Falling machinery parts lead to death or fatal injuries!

- ➔ Cordon off danger area with suitable marking and barrier elements.
- ➔ Place “Standing under suspended loads forbidden” sign in a clearly visible position.
- ➔ Appoint supervisor to monitor the danger areas during transport.
- ➔ **Only** use approved load hoisting and handling equipment with adequate load-bearing capacity.
- ➔ Handling equipment may **only** be connected to designated hoisting points on machine parts when lifting.
- ➔ Pipeline parts may **only** be lifted using the designated hoisting points or a non-slip plastic rope.
- ➔ **Do not stand or walk** under suspended loads.

WARNING

Falls can lead to fatal injuries!

If working at greater height:

- ➔ Wear and use protective equipment against falls.

WARNING

Falls can lead to fatal injuries!

If working above head height:

- ➔ Use tested and approved climbing aids and work platforms.
- ➔ Do **not** use machine parts as climbing aids.

NOTICE

Have dismantling carried out by specialist personnel or by the manufacturer.

NOTICE

The disassembly of the components may take place only in areas, where no explosive atmosphere is present.

18 Disposal

The user is responsible for safe handling of the equipment during the period of its use until environmentally correct disposal.

The disposal of replaced components, dust/cleaning waste and other waste, must comply with the guidelines applicable for the respective materials. These guidelines are normally stipulated by the local respective authorities. If in doubt, contact the employee responsible for safety in your company for advice. The same also applies for auxiliary materials in use such as oil and grease. Disposal must be carried out according to current national legislation.

This sign indicates that the disposal of waste products must be separate from household waste in compliance with the directive on Waste Electrical and Electronic Equipment (WEEE). Any products which are non-functionable or no longer required must be disposed of at a WEEE collection and recycling centre. The correct disposal of waste electrical and electronic equipment serves to protect the environment and people from potential harmful materials that are often contained in electrical and electronic equipment. Your active involvement in the correct disposal of products can help to protect natural resources.

19 Appendix

19.1 Warranty

Scope and duration of the warranty are stipulated in our sales terms and conditions.

This operating manual contains all necessary information and must be read carefully before commissioning the machine / plant.

Worn parts are not covered by the warranty. Warranty claims are to be reported immediately, quoting the plant / project number, immediately upon discovery of the fault.

In addition to the situations named in the sales terms and conditions, the warranty will become void in the event of:

- Non-compliance with the technical data
- Lack of knowledge of or non-compliance with the operating manual and the instructions contained herein with regard to transport, storage, assembly, commissioning, operation and maintenance
- incorrect use
- incorrect handling
- incorrect assembly, commissioning, operation or maintenance
- operation of the machine / plant with faulty safety equipment or incorrectly fitted or non-functioning safety and protection devices
- inadequately qualified or insufficiently trained operating and specialist personnel
- unauthorized constructional changes
- unauthorized alterations to parameters or the software
- unpermitted operating means
- incorrectly executed repair work
- incorrect or incorrectly executed laying or connection of connecting cables
- use of non-original spare parts
- catastrophes as a result of external influence or force majeure

The operator shall ensure under his or her own responsibility,

- that the fundamental safety instructions in this chapter as well as the safety instructions in the individual chapters are observed at all times.
- that correct use is guaranteed and that the machine / plant is operated in accordance with the contractually agreed operating conditions.
- that improper user and incorrect installation or commissioning as well as unpermitted operation are excluded at all times.

19.2 Liability restrictions

All technical information, data and instructions contained in this operating manual for the operation and maintenance / servicing of the machine / plant represent are provided and take into account our experience and expertise in this field to the best of our knowledge.

Drawings and graphics do not necessarily represent the scope of delivery and/or any possible spare part order on the scale of 1:1.

We do not accept any liability for damage or operational disruptions resulting from operating faults, non-compliance with the operating manual or incorrect repair work. We would like to point out explicitly that any spare parts and accessories not supplied by us have not been checked or approved by us.

The installation and use of third-party products can therefore have a negative influence on the prescribed design characteristics of the machine / plant and compromise safety for man, machine and property items.

We are excluded from any liability in the result of damage caused by the use of non-original spare parts and accessories.

Any alterations or modifications to the machine / plant are forbidden unless explicitly approved by the manufacturer in writing. This also applies for the installation and adjustment of safety devices as well as welding on load-bearing parts. Non-compliance results in warranty invalidation.

20 Supplier documentation

Pneumatic components

Flushing gas-tank system (Reco)
Filter regulator (Camozzi)

Drives

Gear motors (Bauer Gear Motor)
Gear motors (STM)
Gear motors (Bonfiglioli)
3-phase AC motors (Hoyer)
3-phase AC motors (Dutchi)
3-phase AC motors (VEM)

Transport facilities

Rotary valve (Nederman Manufacturing)

Explosion-relief elements

Explosion Vent (Brilex)
Explosion relief valve (Hoerbiger)
Flameless explosion relief (rsbp)
Q-Pipe (Rembe)